IMPORTANT SAFETY NOTICES

PREVENTION OF PHYSICAL INJURY

1. Before disassembling or assembling parts of the printer and peripherals, make sure that the power cord is unplugged.
2. The wall outlet should be near the copier and easily accessible.
3. If any adjustment or operation check has to be made with exterior covers off or open while the main switch is turned on, keep hands away from electrified or mechanically driven components.

HEALTH SAFETY CONDITIONS

1. If you get ink in your eyes by accident, try to remove it with eye drops or flush with water as first aid. If unsuccessful, get medical attention.
2. If you ingest ink by accident, induce vomiting by sticking a finger down your throat or by giving soapy or strong salty water to drink.

OBSERVANCE OF ELECTRICAL SAFETY STANDARDS

1. The printer and its peripherals must be installed and maintained by a customer service representative who has completed the training course on those models.

⚠CAUTION

The RAM board has a lithium battery which can explode if handled incorrectly. Replace only with the same type of RAM board. Do not recharge or burn this battery. Used RAM boards must be handled in accordance with local regulations.

⚠ATTENTION

La carte RAM comporte une pile au lithium qui présente un risque d'explosion en cas de mauvaise manipulation. Remplacer la pile uniquement par une carte RAM identique. Ne pas recharger ni brûler cette pile. Les cartes RAM usagées doivent être éliminées conformément aux réglementations locales.

SAFETY AND ECOLOGICAL NOTES FOR DISPOSAL

1. Dispose of replaced parts in accordance with local regulations.
2. Used ink and masters should be disposed of in an envionmentally safe manner and in accordance with local regulations.
3. When keeping used lithium batteries (from the main control boards) in order to dispose of them later, do not store more than 100 batteries (from the main control boards) per sealed box. Storing larger numbers or not sealing them apart may lead to chemical reactions and heat build-up.

SECTION 1

OVERALL MACHINE INFORMATION

1. SPECIFICATIONS

Configuration:	Table-top
Master Processing:	Digital
Printing Process:	Fully automatic one-drum stencil system
Original Type:	Sheet/Book
Original Size:	Maximum 307 mm x 432 mm (12.0" x 17.0")
Reduction Ratios:	Inch version: 93%, 77%, 74%, 65% Metric version: 93%, 87%, 82%, 71%
Enlargement Ratios:	Inch version: 155%, 129%, 121% Metric Version: 141%, 122%, 115%
Zoom:	From 50% to 200% in 1% steps
Directional Magnification:	Vertical: From 50% to 200% in 1% steps Horizontal: From 50% to 200% in 1% steps
Image Mode:	Line, Photo, Line/Photo
Color Printing:	Drum unit replacement system (Red, Blue, Green, Brown, Yellow, Purple, Navy, and Maroon)
Master Feed/Eject:	Roll master, automatic feed/eject
Leading Edge Margin:	5 mm (0.2")
Trailing Edge Margin:	3 mm (0.12")
Printer Paper Size:	Maximum 297 mm x 432 mm (11.6" x 17.0") Minimum 90 mm x 148 mm (3.6" x 5.8")
Printing Area:	A3 drum When using A3 paper: More than 290 mm x 410 mm, 11.4" x 16.1" When using 8 1/2" x 11" paper: More than 290 mm x 415 mm, 11.4" x 16.3" A4 drum More than 290 mm x 204 mm, 11.4" x 8.0"
Print Paper Weight:	47.1 g/m^2 to 209.3 g/m^2 (12.5 lb to 55.6 lb)
Printing Speed:	60, 75, 90, 105, 120 sheets/minute (5 steps)

First Copy Time (Master Process Time):	Less than 23.5 seconds (A3, 11" x 17") Less than 19.0 seconds (A4, 8 1/2" x 11")
Second Copy time (First Print Time):	Less than 26.5 seconds (A3, 11" x 17") Less than 21.5 seconds (A4, 8 1/2" x 11")
Paper Feed Table Capacity:	1,000 sheets (80g/m^2, 20 lb)
Paper Delivery Table Capacity:	1,000 sheets (66.3 g/m^2, 17.6 lb) 1,000 sheets (80g/m^2, 20 lb)
Power Source:	120 V, 50/60 Hz, 3.6 A (for N. America) 220/240 V, 50/60 Hz, 2.0 A (for Europe, Asia)
Power Consumption:	120 V, 50/60 Hz, 400 W (for N. America) 220/240 V, 50/60 Hz, 400 W (for Europe, Asia)
Weight:	120 V version: 125 kg (275.5 lb) 220/240 V version: 125 kg (275.5 lb) Cabinet: 23.5 kg (51.8 lb)

Dimensions (W x D x H):

	Width	Depth	Height
Stored	719 mm, 28.4"	698 mm, 27.5"	646 mm, 25.5"
Stored with document feeder	719 mm, 28.4"	698 mm, 27.5"	676 mm, 26.7"
Set up	719 mm, 28.4"	698 mm, 27.5"	644 mm, 25.4"
Set up with cabinet	719 mm, 28.4"	698 mm, 27.5"	1,072 mm, 42.3"
Set up with document feeder	1,331 mm, 52.5"	698 mm, 27.5"	666 mm, 26.3"
Set up with cabinet and document feeder	1,331 mm, 52.5"	698 mm, 27.5"	1,092 mm, 43.0"

Original Scanning Time:	2.5 ms/line
Pixel Density:	400 dpi
Master Eject Box Capacity:	More than 50 masters under low temperature More than 60 masters at 23 °C, 73°F More than 60 masters under high temperature
Paper Separation:	Friction roller/center separation system
Feed Table Side Plate Movement:	88 mm to 336 mm (3.46" to 13.2")
Side Registration:	±10 mm
Vertical Registration:	More than +15 mm, –20 mm, +0.59", –0.79"
Ink Supply:	Automatic ink supply system
Paper Delivery:	Air knife/vacuum delivery

Print Counter:	7 digits	
Master Counter:	6 digits	
Supplies:	Master	Thermal master 320 mm width 370 masters/roll (with A4 drum) 226 masters/roll (with A3 drum) (VT-II L master)
		Max. run length 2000 prints
	Ink	1000 cc ink pack (black) 600 cc ink pack (Red, Blue, Green, Brown, Yellow, Purple, Navy, Maroon)

2. GUIDE TO COMPONENTS

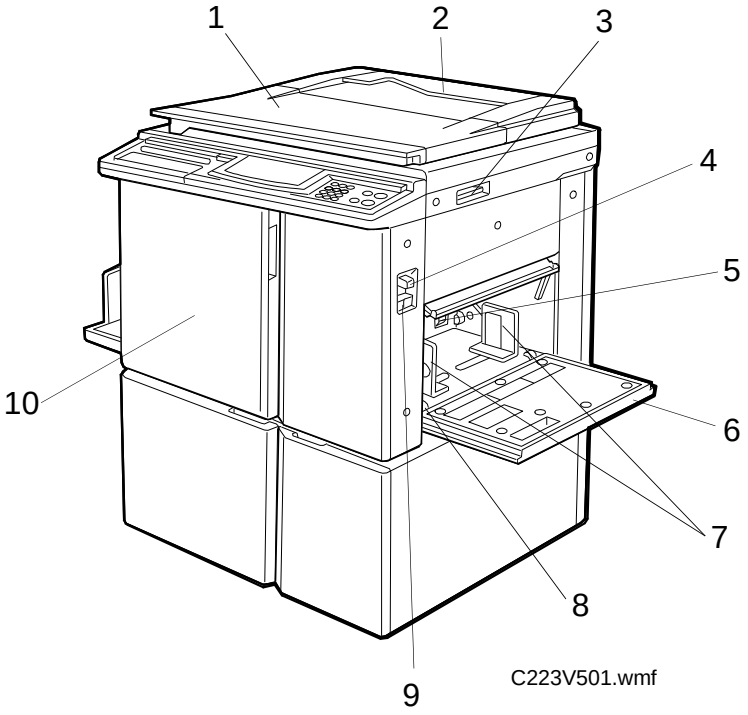

1. Platen Cover
Lower this cover over an original before printing.

2. Original Holder
A convenient place for holding originals while operating the machine.

3. Original Table Release Lever
Use to open the original table unit when installing the master.

4. Feed Roller Pressure Lever
Use to adjust the contact pressure of the paper feed roller according to paper thickness.

5. Separation Roller Pressure Levers
Use to adjust the separation roller pressure to prevent double feed.

6. Paper Feed Table
Set blank paper on this table for printing.

7. Paper Feed Side Plates
Use to prevent paper skew.

8. Side Plate Fine Adjustment Dial
Use to shift the paper feed table sideways

9. Paper Feed Table Down Key
Press to lower the paper feed table.

10. Front Door
Open for access to the inside of the machine.

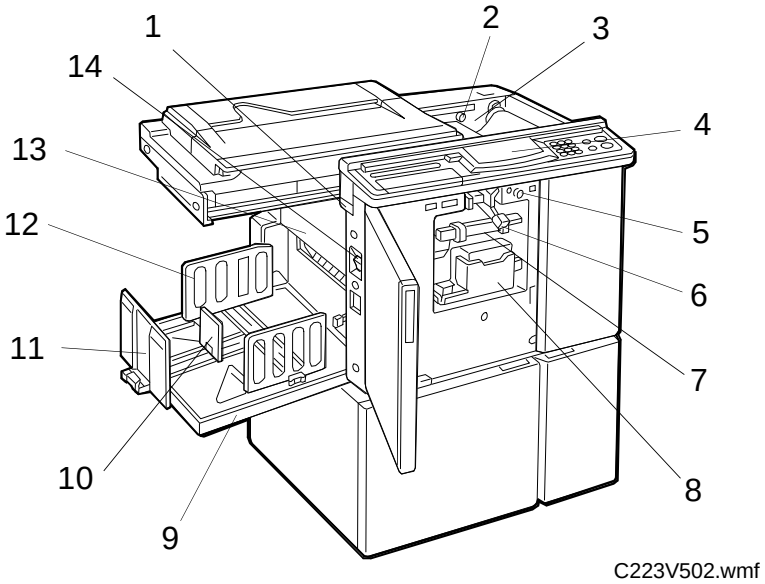

1. **Master Eject Unit Open Button**
   Press to remove misfed paper or a misfed master.

2. **Master Cut Button**
   Press this button to cut the master paper leading edge after installing a new master roll.

3. **Pressure Release Lever**
   Use to install the master roll.

4. **Operation Panel**
   Operator controls and indicators are located here.

5. **Drum Rotation Button**
   Press to replace the drum.

6. **Drum Unit Lock Lever**
   Lift to unlock and pull out the drum unit.

7. **Drum Unit**
   The master is wrapped around this unit.

8. **Ink Holder**
   Set the ink cartridge in this holder.

9. **Paper Delivery Table**
   Completed prints are delivered here.

10. **Small Size Paper Delivery End Plate**
    Use to align the leading edges of prints that are A4, 8 1/2" x 11" or smaller.

11. **Paper Delivery End Plate**
    Use to align the leading edges of prints larger than A4, 8 1/2" x 11".

12. **Paper Delivery Side Plates**
    Use to align the prints on the paper delivery table.

13. **Master Eject Container Cover**
    Open when removing the master eject box.

14. **Main Switch**
    Use to turn the power on or off.

3. MECHANICAL COMPONENT LAYOUT

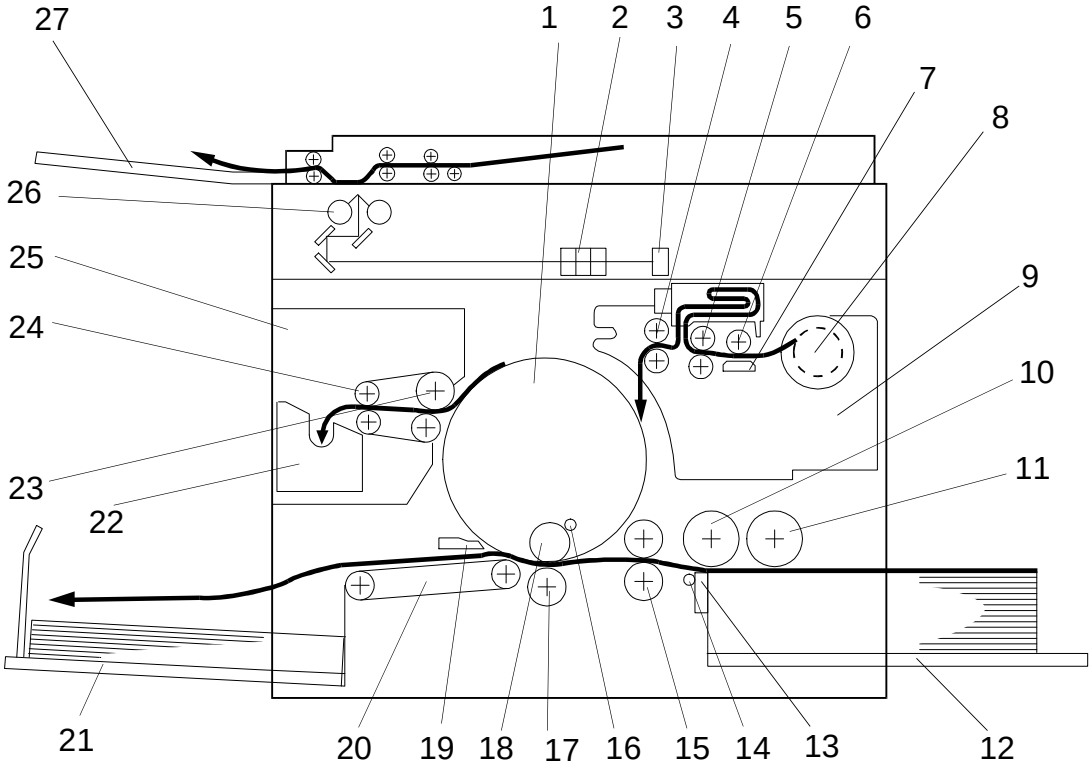

C223V500-1.wmf

1. Drum Unit
2. Lens
3. CCD
4. Reverse Roller
5. Master Feed Roller
6. Platen Roller
7. Thermal Head
8. Master Roll
9. Master Making Unit
10. Upper Separation Roller
11. Paper Feed Roller
12. Paper Table
13. Separation Plate
14. Lower Separation Roller
15. 2nd Feed Roller
16. Doctor Roller
17. Press Roller
18. Ink Roller
19. Paper Exit Pawl
20. Transport Unit
21. Paper Delivery Table
22. Master Eject Box
23. 1st Eject Roller
24. 2nd Eject Roller
25. Master Eject Unit
26. Exposure Lamps
27. Original Exit Tray

4. DRIVE LAYOUT

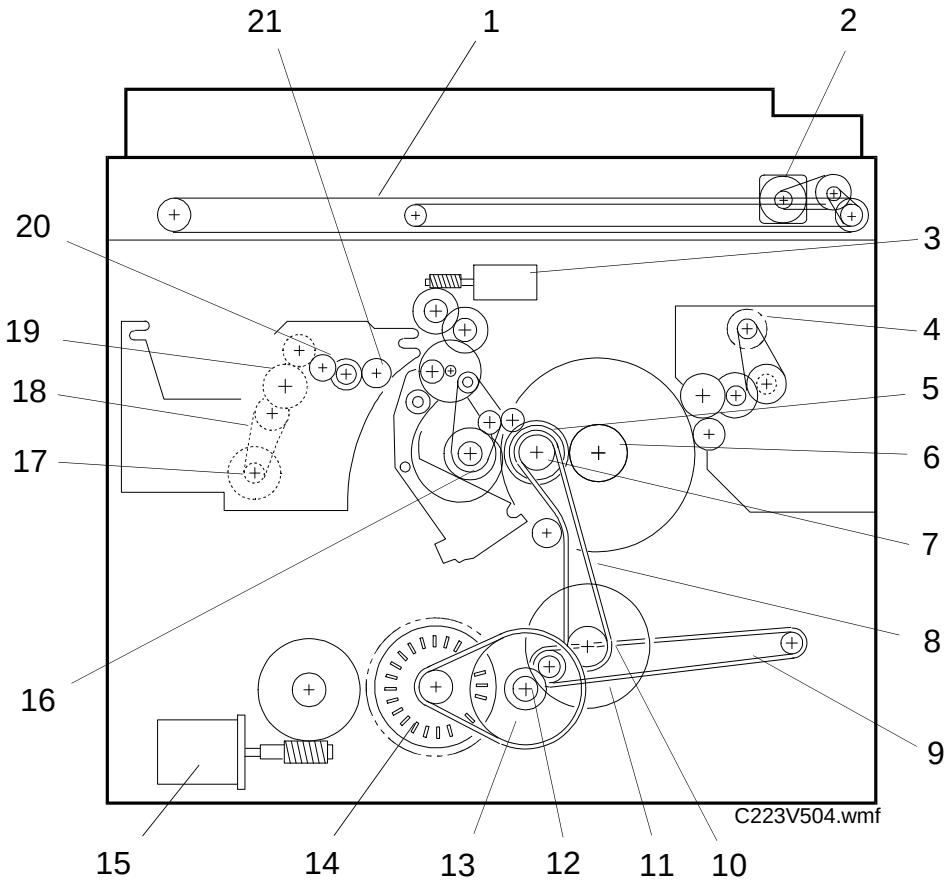

1. Scanner Belt
2. Scanner Motor
3. Image Position Motor
4. Master Eject Motor
5. Drum Drive Gear
6. Drum Unit Gear
7. Drum Drive Pulley
8. Main Drive Belt
9. Transport Belt
10. Printing Pressure Pulley
11. Printing Pressure Gear
12. Idle Gear
13. Idle Pulley
14. Main Motor
15. Paper Table Drive Motor
16. Paper Feed Cam Gear
17. Master Feed Motor
18. Timing Belt
19. Platen Roller Gear
20. Master Transport Roller Gear
21. Reverse Roller Gear

5. ELECTRICAL COMPONENT DESCRIPTIONS

INDEX No.	NAME	FUNCTION
Motors		
15	Vacuum Fan Motor	Provides suction so that paper is held firmly on the transport belt.
37	Main Motor	Drives paper feed, drum printing, and paper delivery unit components.
40	Paper Table Drive Motor	Raises and lowers the paper feed table.
45	Image Positioning Motor	Changing the relative timing of the paper feed roller and the drum to adjust the vertical image position.
51	Master Feed Motor	Feeds the master to the drum.
53	Master Buffer Fan Motor	Provides suction so that the master is stored in the master box during the master eject operation.
54	Pressure Plate Motor	Raises and lowers the pressure plate in the master eject mechanism.
60	Air Knife Motor	Drives the fan to separate the paper's leading edge from the drum.
62	Master Eject Motor	Sends the used master into the master eject box.
64	Cutter Motor	Drives the mechanism that cuts the master.
70	Scanner Motor	Drives the 1st and 2nd scanners.
Solenoids		
31	Ink Supply Solenoid	Releases the spring clutch to activate the ink supply pump.
32	Master Press Sheet Solenoid	Inserts the mylar sheet between the press roller and the drum during a quality start operation.
36	Printing Pressure Solenoid	Engages the pressure on/off lever when a paper misfeed occurs.
39	Paper Feed Solenoid	Releases the sector gears to feed the paper.
41	Detection Pin Release Solenoid	Releases the detection pin arm to apply printing pressure during a quality start operation.
46	Master Feed Clamper Solenoid	Open the master clamper to catch the master during master feed.
47	Drum Lock Solenoid	Prevents the drum unit from being removed during a printing run.
48	Master Eject Clamper Solenoid	Open the master clamper to eject the master.
59	Master Eject Solenoid	Presses the lower master eject roller against the drum surface.
Switches		
1	Scanner Unit Safety Switch	Cuts off the power line of the main and paper table drive motors when the scanner unit is open.
2	Paper Table Down Button	Instructs the CPU to turn on the paper table drive motor to lower the paper table.
5	Paper Table Open Switch	Checks whether the paper table is opened or not.

INDEX No.	NAME	FUNCTION
7	Paper Table Safety Switch	Stops lowering the paper feed table to prevent users from catching their fingers under it, by cutting the ac power. It also closes when the paper feed table is closed.
12	Front Door Safety Switch	Informs the CPU when the front door is open, and cuts off the power line to the paper table drive motor.
18	Test Switch	Disables the front door, paper table, master eject unit, and scanner unit safety switches.
20	Delivery Table Open Switch	Checks whether the delivery table is open or not.
21	Main Switch	Turns the power on or off.
22	Air Knife Motor Safety Switch	Cuts off the power line of the air knife motor when the master eject unit is open.
27	Drum Rotation Button	Instructs the CPU to rotate the drum at 10 rpm.
28	Drum Unit Safety Switch	Checks whether the drum unit is set correctly or not.
30	Master Eject Unit Safety Switch	Cuts off the power line when the master eject unit is open.
44	Master Cut Button	Instructs the CPU to feed a short strip of master paper and cut the master paper.
52	Left Cutter Switch	Detects when the cutter position is at the far left (operation side).
61	Master Eject Box Switch	Checks whether the master eject box is set properly.
66	Right Cutter Switch	Detects when the cutter position is at the far right (non-operation side).
76	ADF Set Switch	Detects if the optional document feeder is closed.
Sensors		
3	Paper End Sensor	Informs the CPU if there is paper on the paper table.
4	Paper Width Sensors	Informs the CPU of the printer paper width.
6	Paper Length Sensor	Informs the CPU of the printer paper length.
8	Paper Table Height Sensor	Informs the CPU if the paper table is at the paper feed position.
11	Paper Table Lower Limit Sensor	Informs the CPU if the paper table is at the lowest position.
13	Printing Pressure Sensor	Informs the CPU if printing pressure is applied. Also, detects paper misfeeds.
14	1st Paper Exit Sensor	Detects paper misfeeds.
17	2nd Paper Exit Sensor	Detects paper misfeeds.
33	2nd Drum Position Sensor	Checks the position of the drum.
35	1st Drum Position Sensor	Checks the position of the drum.
38	Drum Rotation Sensor	Supplies timing pulses to the CPU based on the main motor speed.
49	Drum Master Sensor	Informs the CPU if there is a master on the drum.
50	Master Buckle Sensor	Informs the CPU if the master is buckling.
55	Lower Pressure Plate Sensor	Informs the CPU if the pressure plate in the master eject mechanism is at the lower limit position.
56	Upper Pressure Plate Sensor	Informs the CPU if the pressure plate in the master eject mechanism is at the upper limit position.

INDEX No.	NAME	FUNCTION
57	Full Master Box Sensor	Informs the CPU whether the master eject box is full of masters or not.
58	Master Eject Sensor	Detects used master misfeeds.
65	Master End Sensor	Informs the CPU when the master roll in the master making unit runs out.
68	Scanner Home Position Sensor	Informs the CPU when the 1st scanner is at home position.
72	Platen Cover Position Sensor	Detects when the platen cover or the optional document feeder is opened more than 25 degrees above the exposure glass.
75	Original Sensor	Detects if an original is placed on the exposure glass.
Printed Circuit Boards		
9	Image Processing PCB	Control the image processing performance.
29	Main Control PCB	Controls all machine functions both directly and through other boards.
42	AC Drive PCB	Controls the ac components using relays.
43	Ink Detection PCB	Informs whether ink is present in the drum.
71	CCD PCB	Converts light intensity into an electrical signal.
74	A/D Conversion PCB	Converts analog signals into digital signals.
Counters		
23	Master Counter	Keeps track of the total number of masters made.
24	Total Counter	Keeps track of the total number of prints made.
Others		
10	Transformer	Steps down the wall voltage.
16	Power Supply Unit	Provides power for all dc components.
19	Circuit Breaker	Cuts the ac line off.
25	Operation Panel	Interfaces the CPU and the operator.
26	Drum Rotation LED	Turns to green from red when the drum stops at the home position.
34	Noise Filter	Filters out electrical noise from the ac power input line.
63	Reverse Roller Clutch	Transfers drive to the reverse roller.
67	Thermal Head	Creates the master using heat.
69	Xenon Lamp	Illuminates the original.
73	Xenon Lamp Stabilizer	Stabilizes the power supplied to the xenon lamp.

6. PRINTING PROCESS

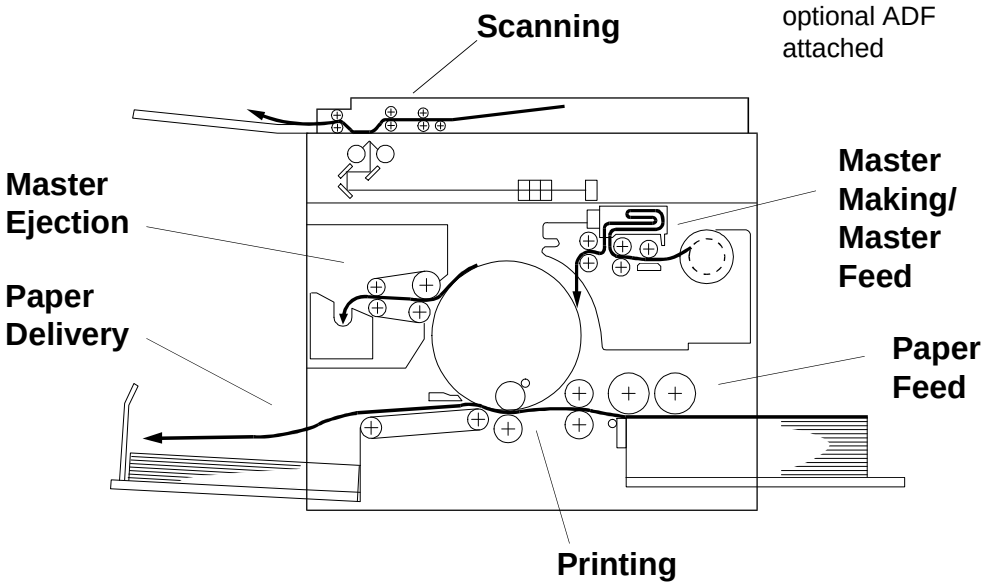

C223V500.wmf

1. Master Ejection/ Scanning/ Master Making: At the start of the printing run, the machine ejects the used master wrapped around the drum into the master eject box.

   At the same time, the machine scans the original on the exposure glass (reflected light goes to the CCD via the mirrors and the lens. The scanned image is transferred to the master using a thermal head.

   While the old master is still being ejected, the new master is stored in a box.

2. Master Feed: After the old master has been ejected, the new master is fed to the drum and wrapped around it. At the same time, the master is cut off from the roll.

3. Paper Feed: Individual sheets of paper are fed to the drum.

4. Printing: The paper fed from the paper feed mechanism is pressed onto the drum. This transfers ink to the printer paper through the drum screen and the master.

5. Paper Delivery: The exit pawl and air knife peel off the printout, and the printout is ejected onto the paper delivery table.

7. MAJOR DIFFERENCES BETWEEN THE C218 AND THE C223 MODELS

The C223 model was developed based on the C218 model.

The following table lists the major differences between the C223 and the C218 models.

No.	Item	Remarks
1	Exposure Lamp	The exposure lamp has been changed from a fluorescent lamp to two xenon lamps.
2	Master Buffer Mechanism	The master process time has been reduced as a result of the new master buffer mechanism. The master making process starts at the same time as the master eject operation starts.
3	Quality Start	A quality start mechanism has been added to minimize waste prints after a long idle interval.
4	Platen Roller Holding Method	To ensure correct platen roller positioning, the platen roller is held by two screws instead of two levers.
5	Leading Edge Margin	The leading edge margin has been reduced from 8 mm to 5 mm. The drum screens and printing pressure cam have been changed.
6	Separation Roller Shaft	The diameter of the separation roller shaft has been increased. Due to this modification, the paper feed vibration noise has been reduced.
7	Noise Reduction Cover	The noise reduction cover has been added to reduce paper feed noise.
8	Paper Size Sensors	The paper size detection board has been eliminated. The paper size sensors directly send signals to the main control board.
9	Optional Equipment	The following items have been newly lined up as the options for the C223 model: Sorter Stapler DS20A/DS20B DF II (50 sheets) Large Capacity Tray LT4000
10	Line/Photo Mode	To allow clear prints of originals having line and photo areas, Line/Photo mode has been added. Photo mode is processed using Error Diffusion, which is similar to the CAPIX method used in the C210 and C218 models.
11	Economy Mode	If "Economy" mode is selected on the operation panel, a lower thermal head energy is applied when a master is made. As a result, the image will be lighter than normal and ink consumption will be less.
12	CS Mode	Customers can register three of seven frequently used user SP modes in CS mode. The setting can be recalled using the CS mode key which is newly added.
13	Scanner Lock Lever	To facilitate operation, the shape of the scanner lock lever has been changed.
14	Paper Return Mechanism	The paper return mechanism (a solenoid and a dc motor) has been eliminated.

No.	Item	Remarks
15	Cassette Size Detection	The cassette size detection board (red switch) has been eliminated. (The cassette has been changed from standard equipment to an option).
16	Paper Feed Motor	The paper feed motor has been changed from an ac motor to a dc motor.
17	Original Tray Cover	To prevent the originals from dropping when the ADF is opened, a cover has been added on the original tray.
18	Base Pads	The shape of the base pads has been changed so that they can be used for both the normal table and the table for the LCT.

SECTION 2

DETAILED SECTION DESCRIPTIONS

1. MASTER EJECT

1.1 OVERALL

At the end of the printing cycle, the used master remains wrapped around the drum to prevent the ink on the drum surface from drying. When the Master Making key is pressed to make a new master, the used master is ejected from the drum.

The master is pulled off the drum, then it goes through the eject rollers and into the master eject box. A pressure plate then compacts the used master.

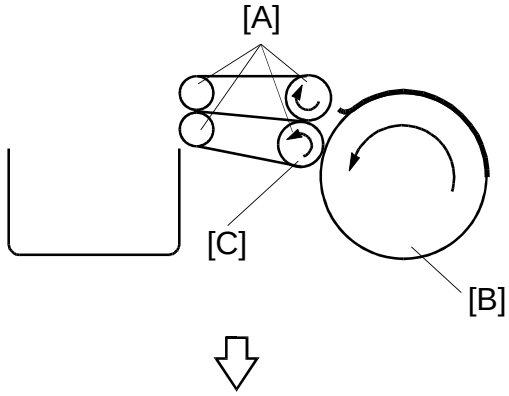

- The drum [B] rotates in reverse (opposite to the printing direction).
- The master eject rollers [A] rotate.
- The lower eject roller [C] is pressed against the drum.

C223D505.wmf

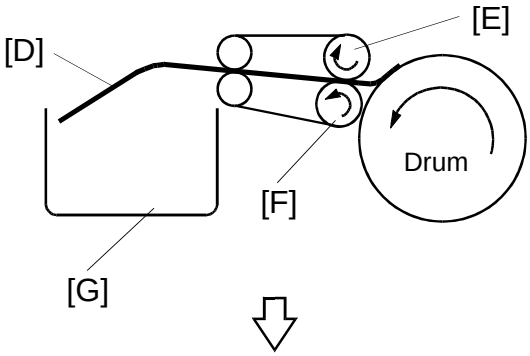

- The trailing edge of the master, which curls up from the drum, passes between the upper [E] and lower [F] eject rollers, and the master [D] is peeled off the drum and dumped into the master eject box [G].

C223D506.wmf

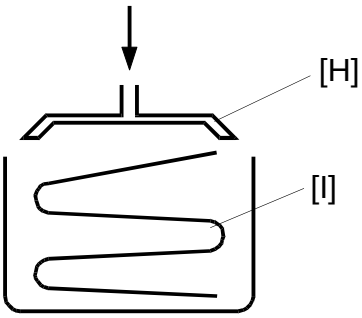

- The pressure plate [H] compacts the ejected master [I].

C223D507.wmf

1.2 MASTER EJECT ROLLER ROTATION MECHANISM

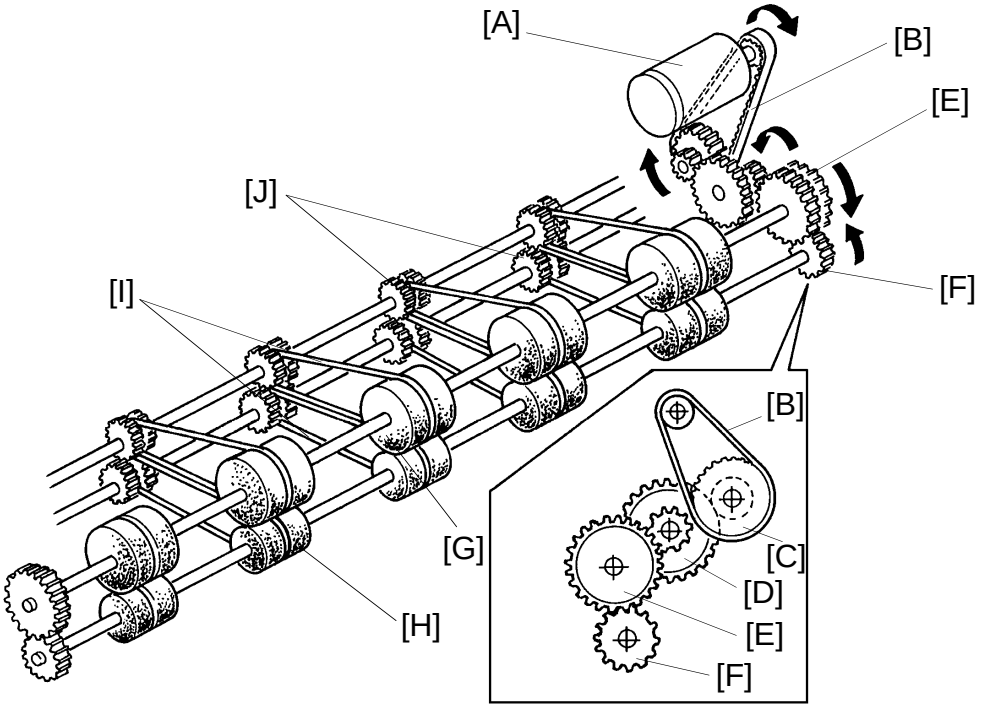

C223D511.img

When an original is in place and the Master Making key is pressed, the main motor starts turning at 22 rpm in reverse. As a result, the drum also turns in reverse (compared with the rotation direction for printing).

At this time, if the drum master sensor detects a master on the drum, the master eject motor [A] starts rotating. Drive is transmitted to gear [E] and to the upper first eject rollers [G] through the timing belt [B] and gears [C] and [D]. Gear [F] drives the lower first eject rollers [H]. The belts [I] transmit drive from the first eject rollers to the upper and lower second eject rollers [J].

(If the drum master sensor detects no master on the drum when the Master Making key is pressed, the machine skips the master eject process and goes directly to the master making process.)

After the master eject process is completed, the drum returns to its home position. The master eject rollers then stop rotating.

This model has four rollers on each eject roller shaft.

1.3 MASTER EJECT ROLLER DRIVE MECHANISM

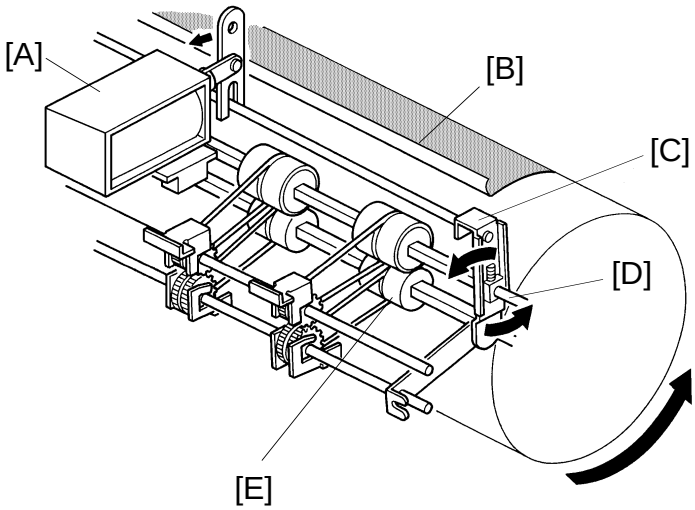

C223D508.img

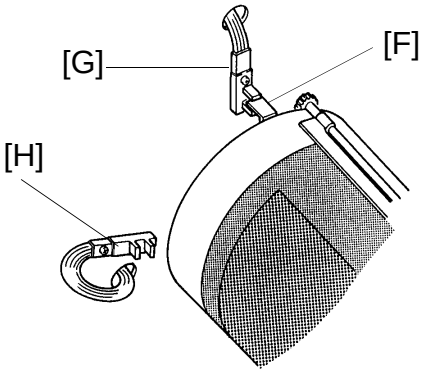

C223D510-1.img

The drum position is detected by the first [G] and second [H] drum position sensors. When the drum reaches its home position, the first drum position sensor [G] is actuated by the interrupter [F] on the rear side of the drum.

To eject the master, the drum turns in reverse (opposite to the printing direction). When the drum is 70° past the 1st drum position sensor, the master eject solenoid [A] turns on and the supporter [C] rotates counterclockwise on the upper eject roller shaft [D]. This forces the lower first eject roller [E] against the drum.

As the drum turns, the curled trailing edge of the master [B] passes between the upper and lower first eject rollers. The first eject rollers then peel the master from the drum.

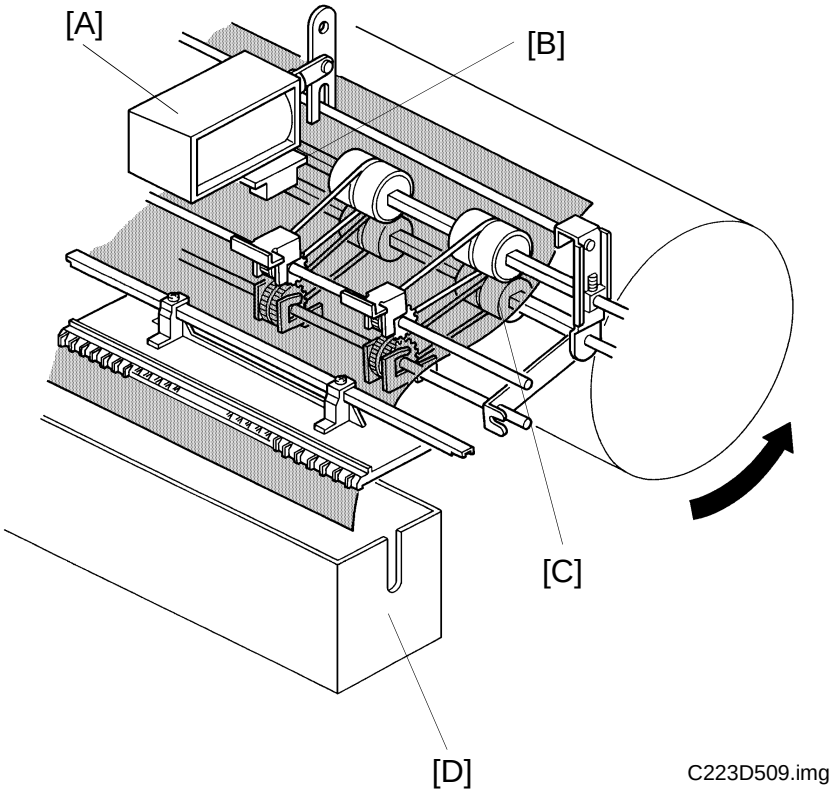

When the drum is 109 degree past the 1st drum position sensor, the master eject solenoid [A] turns off, separating the lower first eject rollers [C] from the drum.

Shortly after the leading edge of the ejected master has passed between the upper and lower first eject rollers, the master eject sensor [B] is activated. The master is then dumped into the master eject box [D].

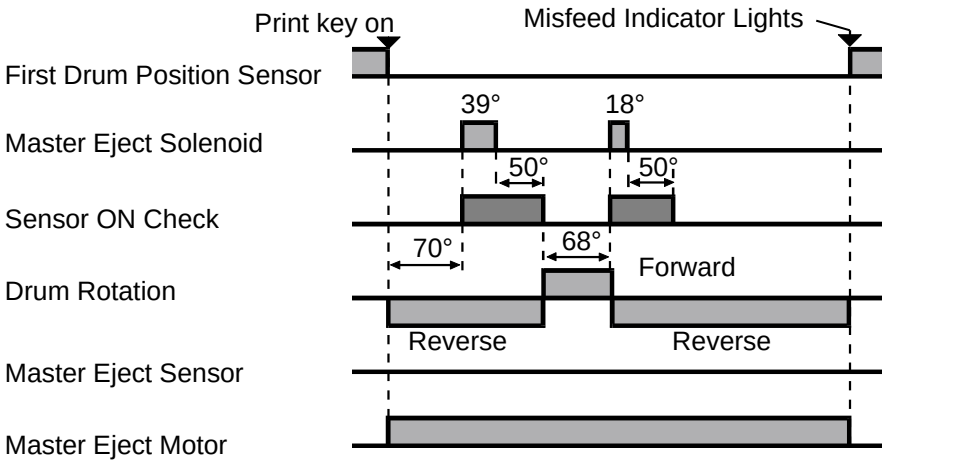

C223D512.wmf

[Master Eject Misfeed Detection]

The misfeed indicator for the master eject section blinks in the following cases:

Case 1: The master eject sensor is not activated and the drum has turned 50 degrees more (still in reverse and after de-activation of the master eject solenoid). The machine knows that the eject rollers have failed to catch the master. So the drum returns 68 degrees (in the printing direction) to repeat the master eject process once again. The master eject solenoid is again energized while the drum turns another 18 degrees to try to catch the master.

If the master eject sensor once again fails to detect the master, then the drum returns to its home position and the misfeed indicator blinks.

Case 2: The drum finishes its rotation for the master ejecting process and returns to the home position, but the master eject sensor does not turn off. This means that the master is still in between the master eject rollers, the misfeed indicator blinks.

1.4 MASTER EJECT CLAMPER MECHANISM

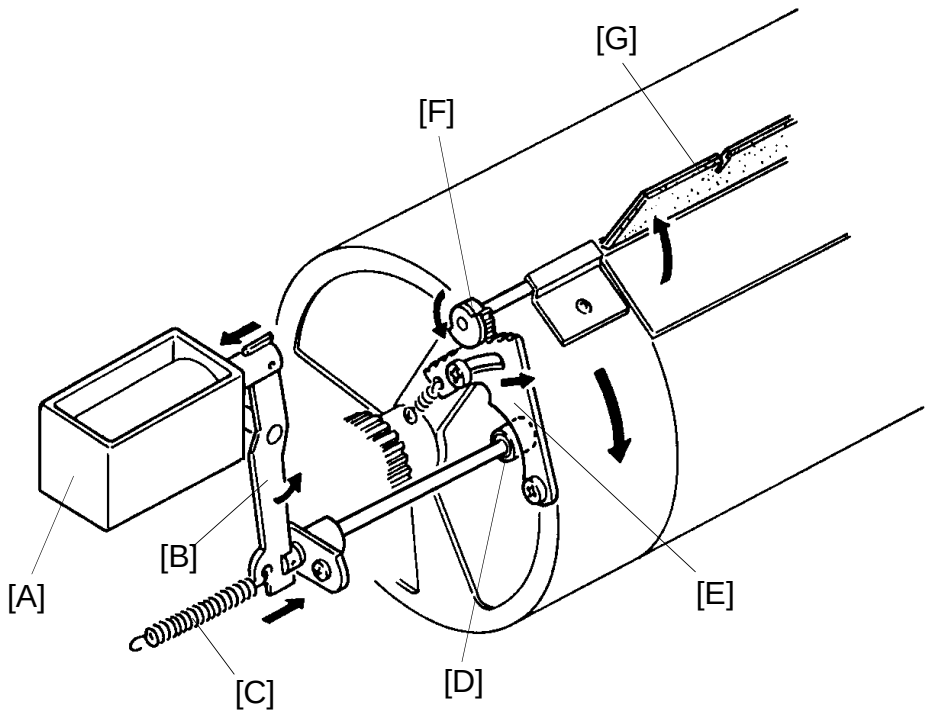

C223D513.img

When the drum has rotated 306° (in reverse) past the 1st drum position sensor, the master eject clamper solenoid [A] turns on and lever [B] moves counterclockwise a short way as shown. This moves the cam [D] inside the drum. Drum rotation brings the clamper sector gear [E] against the cam [D]. Gear [F] turns counterclockwise as it engages the clamper sector gear, thus opening the master clamper [G]. This releases the master from the drum.

The drum keeps on turning until the interrupter at the rear of the drum has gone 13 degrees past the first drum position sensor. Then, the main motor turns off. Half a second later, the master eject clamper solenoid [A] turns off and spring [C] pulls cam [D] back to its initial position. The drum then rotates forward to its home position.

1.5 PRESSURE PLATE UP/DOWN MECHANISM

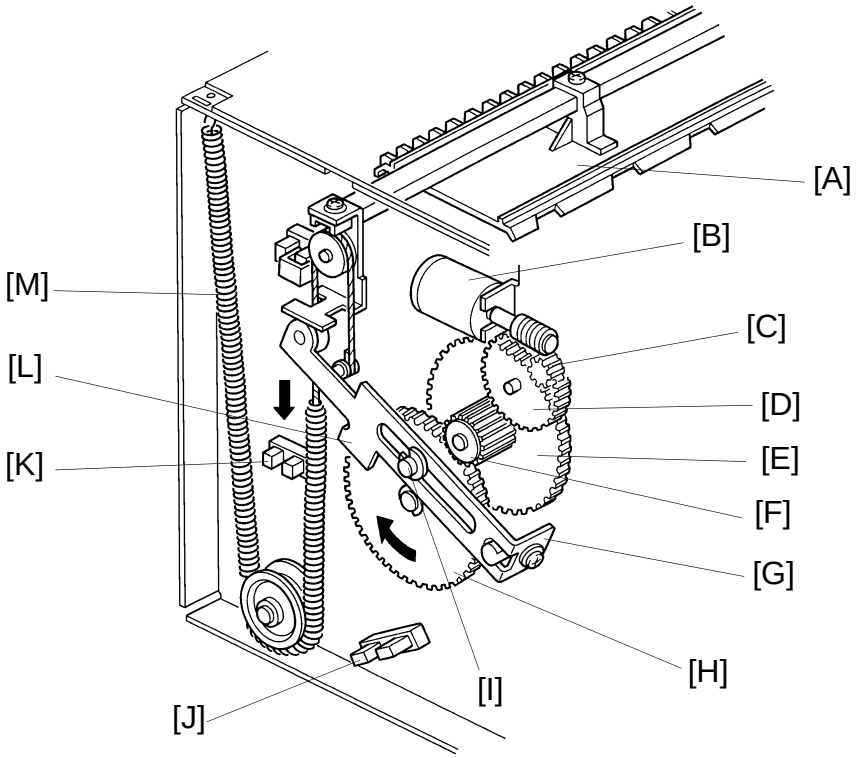

C223D514.img

Pressure Plate Down

When the interrupter at the rear of the drum interrupts the first drum position sensor (this happens at the end of the master eject process), the pressure plate motor [B] starts. This drives gear [H] clockwise by means of gears [C], [D], [E], and [F].

Pin [I] on gear [H] moves link [G] down until the link interrupter [L] interrupts the lower pressure plate sensor [J]. Spring [M] pulls down on the pressure plate and the ejected master in the master eject box is compressed by the pressure plate [A].

If the master box full sensor [K] does not turn on when the pressure plate goes down, it means the master eject box is filled with ejected masters. In this case, the master eject box full indicator blinks, and the machine stops after a new master is wrapped around the drum.

The indicator goes out after the master eject box switch has been turned off and on. Then the master box full sensor is checked again after one master has been fed. This is to prevent the indicator from being reset without removing the ejected masters from the box. When the indicator is blinking, the Master Making key does not work, but the Print Start key and Proof key work so that the master currently on the drum can be used for printing.

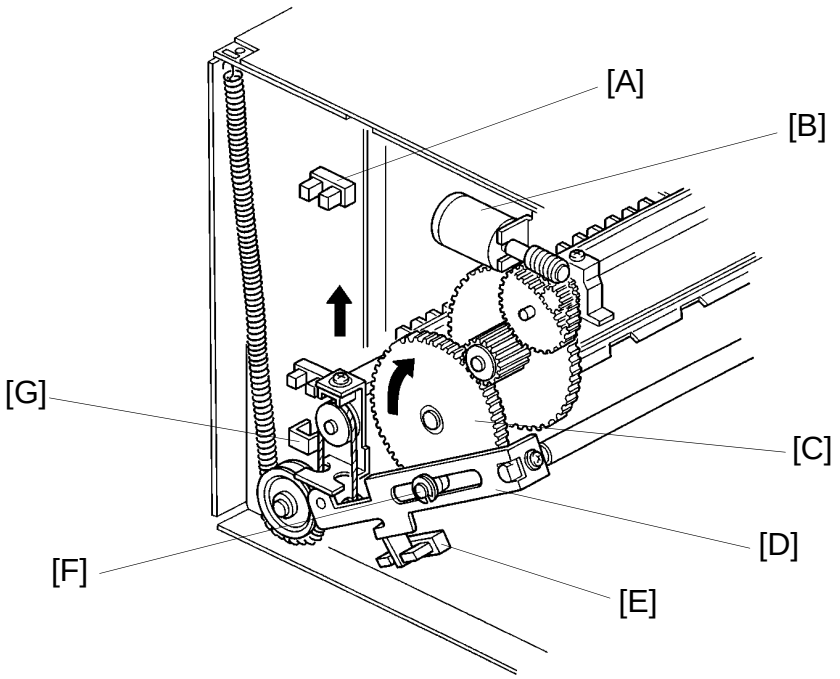

C223D515.img

Pressure Plate Up

When the master has been wrapped around the drum in the master making process and the master cutter leaves the home position to cut the master, the pressure plate motor [B] starts rotating to raise the pressure plate.

When the pressure plate motor [B] turns, the gear [C] is driven through the relay gears. The pin [F] on the gear inserted into the link [D] rises and lifts the left end of the link, thus raising the pressure plate.

The gear [C] continues turning until the interrupter [G] at the front end of the pressure plate blocks the upper pressure plate sensor [A]. At this time, the master eject motor [B] stops and the pressure plate is held in the upper position.

Pressure Plate Motor Lock Detection

To prevent the pressure plate motor from locking, "E-12" lights up on the operation display panel under the following conditions:

1. When the lower pressure plate sensor [E] is not activated within 8 seconds after the pressure plate motor starts to lower the pressure plate.
2. When the upper pressure plate sensor [A] is not activated within 4 seconds after the pressure plate motor starts to raise the pressure plate.

1.6 ELECTRICAL TIMING

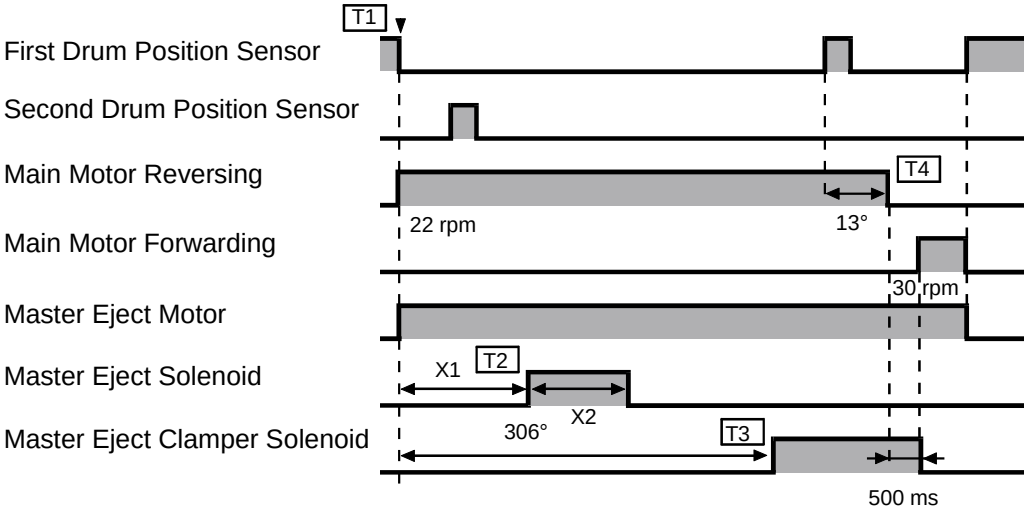

C223D516.wmf

T1: When the Master Making key is pressed, the main motor and master eject motor start turning. At the same time, the paper table drive motor starts turning to lift the paper table to the paper feed position.

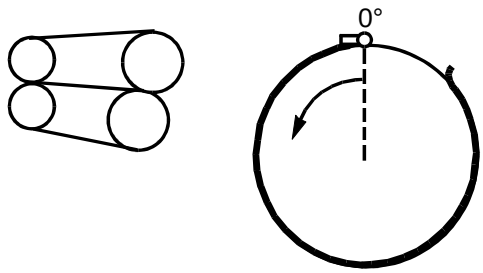

C223D612.wmf

T2: When the drum rotates X1 degrees past the first drum position sensor actuation position (drum home position), the master eject solenoid is energized. This presses the lower eject rollers against the drum surface. The master eject solenoid is de-energized when the drum rotates X2 degrees more.

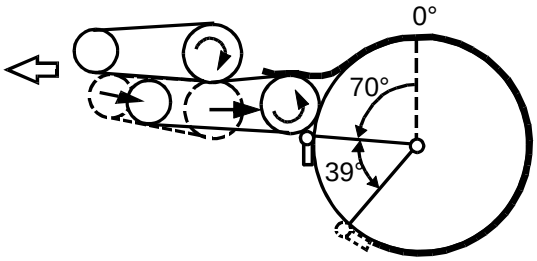

C223D613.wmf

The drum rotation angles X1 and X2 depend on the drum type. This machine has two types of drums: one is the A3/DLT drum (standard), and the other is the A4/LT drum (optional). X1 and X2 for each drum are as follows

Drum Type	A3/DLT	A4/LT
X1 (degree)	70	174
X2 (degree)	36	55

T3: When the drum rotates 306 degrees past the home position, the master eject clamper solenoid is energized.

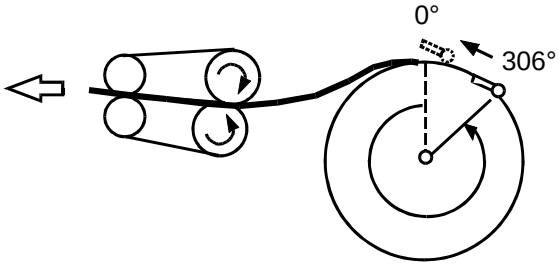

C223D614.wmf

T4: When the drum rotates 13 degrees past the drum home position, the drum stops rotating.

500 milliseconds later (the drum completely stops during this period), the master eject clamper solenoid is de-energized and the drum starts rotating forward. The drum then returns to its home position. The master eject process is now over.

Soon after this, the machine starts feeding a new master and the drum starts rotating in reverse to begin the master making process.

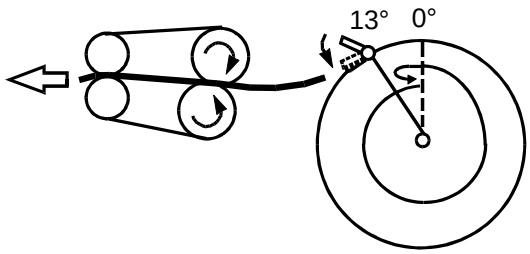

C223D615.wmf

2. SCANNER

2.1 OVERALL

A book type scanner is used for the #C223 model. There are two modes for scanning originals.

Platen Cover Mode: The original is placed on the exposure glass, and the scanner motor drives the scanner to scan the original.

ADF Mode: When an optional Document Feeder is installed, the original is fed onto the exposure glass. The scanner moves 22 mm away from the CCD and remains still as it scans the original. The scanner comes back to the home position when the scanning is finished.

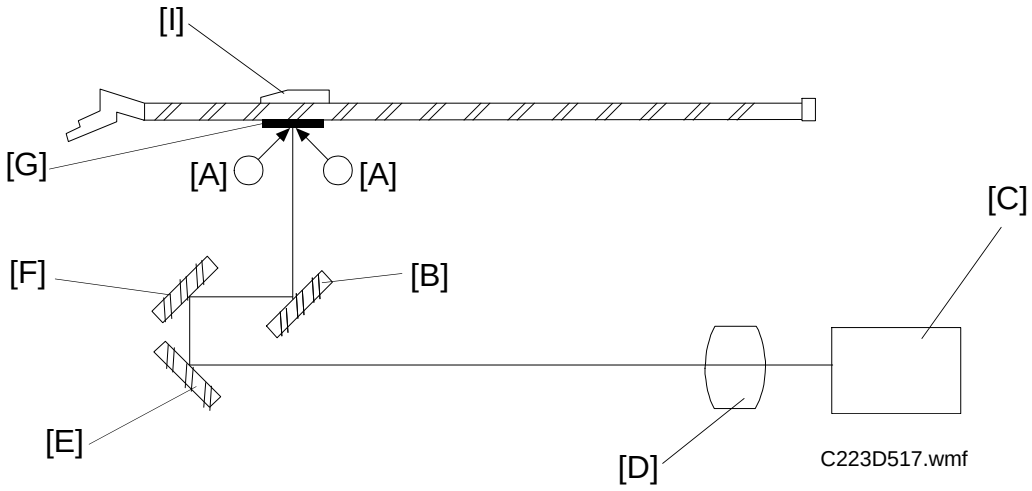

The light from the xenon lamps [A] is reflected from the original by the first [B], second [F], and third [E] mirrors through the lens [D] to the CCD [C].

In the Platen Cover Mode, the CCD reads the white plate [G] on the back of the original scale [I] each time before scanning to obtain a standard white level. The standard white data are used to correct distortion. The scanner is at its home position when it reads the white level.

In the ADF mode, as the scanner moves 22 mm, the CCD reads the white plate installed on the ADF.

2.2 SCANNER MECHANISM

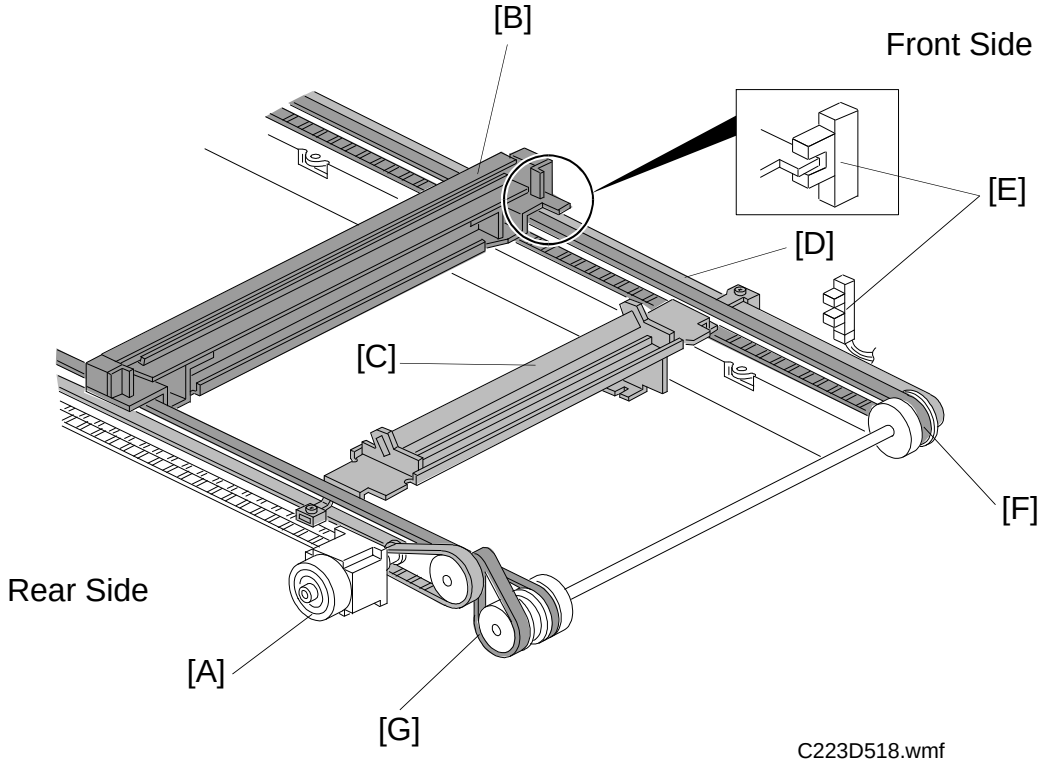

The scanner motor [A] (a stepper motor) drives the scanners. The first scanner [B], which consists of the exposure lamp and the first mirror, is driven by the first scanner belt [F]. The second scanner [C], which consists of the second and third mirrors, is driven by the second scanner belt [D]. Both scanners move along the guide rails.

The timing belt [G] moves the second scanner at half the speed of the first scanner. This is to maintain the focal distance between the original and the lens during scanning.

The scanner home position is detected by the scanner home position sensor [E]. In the Platen Cover Mode, the scanner scans the original on the exposure glass for the full A3/DLT length, then returns until the scanner home position sensor is activated. In the ADF Mode, the scanner moves 22 mm backwards (away from the CCD), to scan the original which is fed by the ADF. When the master making process is finished and the ADF motor stops, the scanner goes back to the home position.

2.3 PLATEN COVER POSITION DETECTION

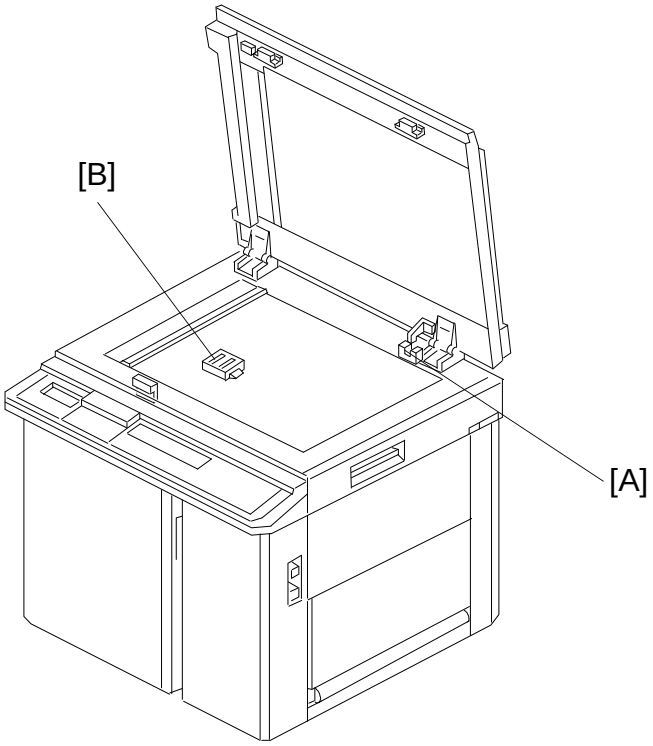

C223D519.wmf

When the platen cover is opened about 25 degrees, the Platen Cover Position Sensor [A] is deactivated. When this sensor is deactivated, the Original Sensor [B] is able to detect the original on the exposure glass.

When the Platen Cover Position Sensor is deactivated and the Original Sensor detects no original on the exposure glass, the machine indicates "SET THE ORIGINALS" on the operation display. This is to prevent wasting of the master that would occur when the Master Making key is pressed with no original placed on the exposure glass.

When the original is placed on the exposure glass and the Master Making key is pressed with the platen cover opened more than 25 degrees (as the Platen Cover Position Sensor is deactivated), the shadow erase function is enabled.

Notes regarding the shadow erase function

- Margins of 1 mm [0.02"] on all four sides of the original will be erased. The width of the margins will change depending on the reproduction ratios.
- Shadows near the edge of a book might not be erased completely.
- If the shape of the original is as shown below, shadows might appear on the prints. In this case, make the master with the platen cover closed.

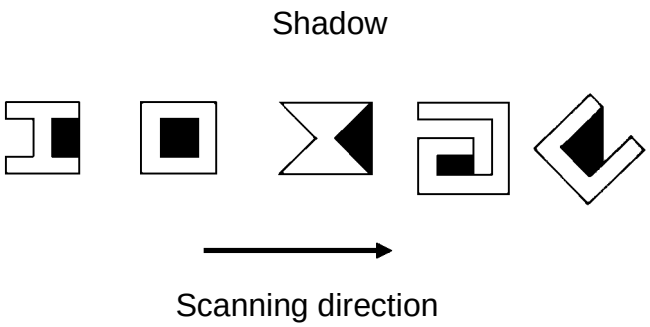

C223D520.img

- If there is a line or solid image on the margin at the center or at the edges being erased, parts of the image might be erased as shown below.

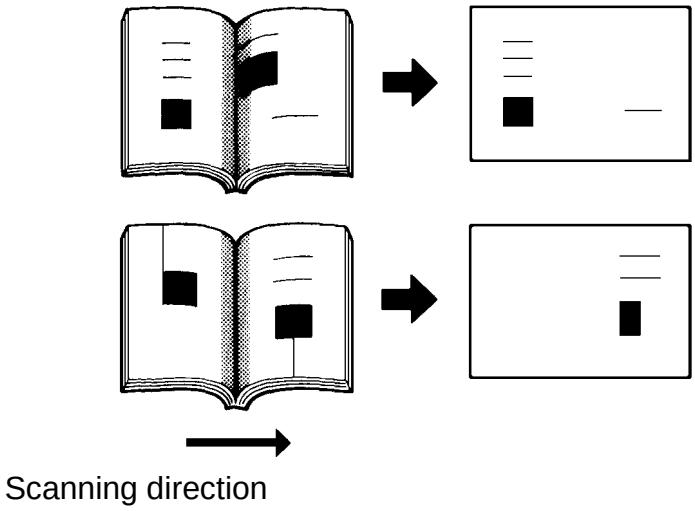

C223D521.img

2.4 ELECTRICAL TIMING

2.4.1 Platen Mode

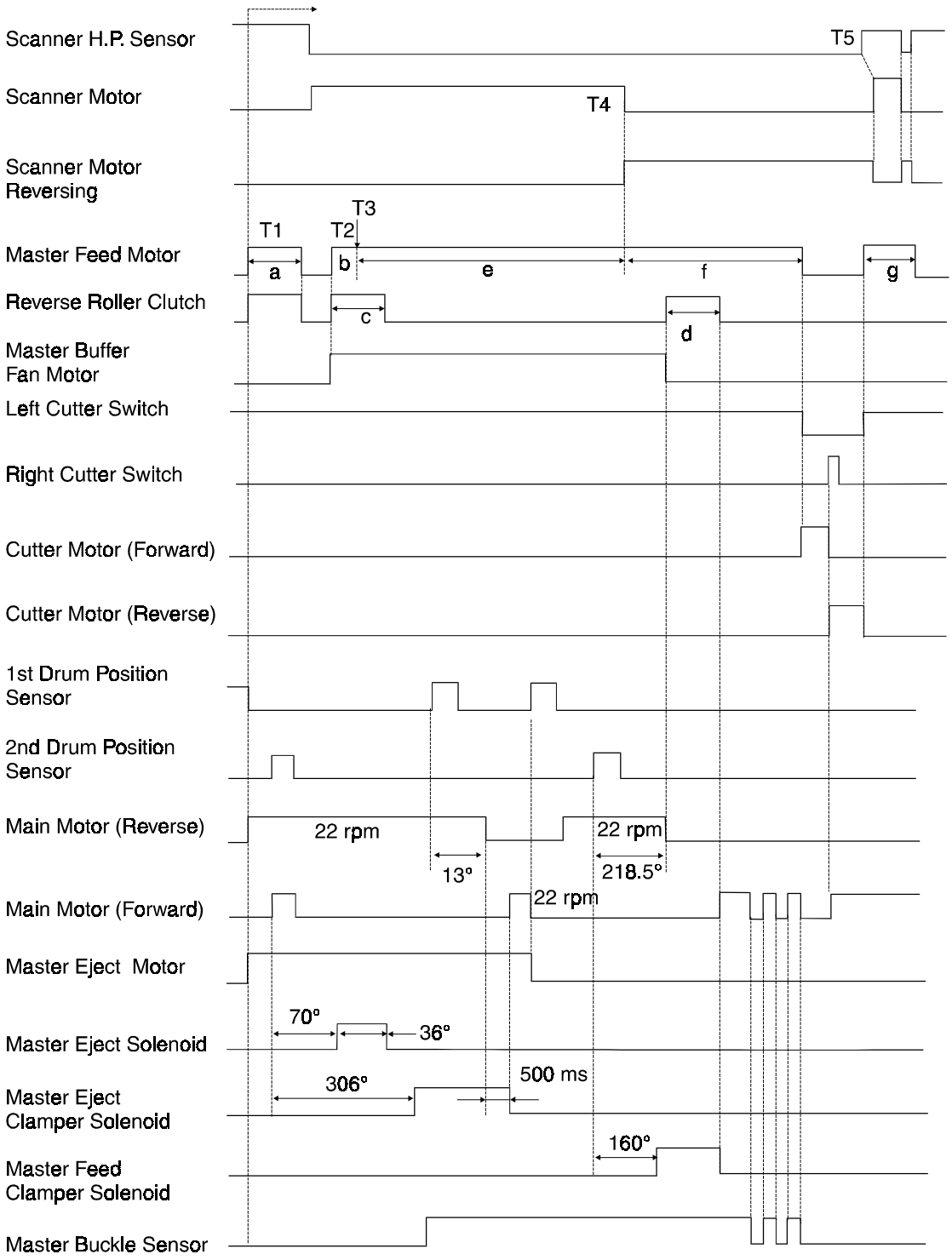

C223D522.wmf

Detailed Descriptions

Master Feed Lengths

a: 18.7 mm
b: 0.7 mm
c: 10.7 mm
d: 13.7 mm
e: 420 mm
f: 62.5 mm (211 mm: A4/LT drum)
g: 40 mm (61 mm: A4/LT drum)

The timing chart shows how scanning takes place at the same time as master ejection and master making.

T1: When the master making key is pressed, the main motor starts reverse rotation at 22 rpm. At the same time, the master feed motor and the reverse roller clutch turn on to feed the master 18.7 mm. Then they switch off, and the scanner motor turns on shortly afterwards.

T2: When the scanner has moved 20 mm from the home position, the master feed motor, master buckle fan motor, and the reverse roller clutch turn on.

T3: The thermal head starts to make the new master when the master has been transported 1mm.

T4: When 420 mm (the maximum scan length) has been scanned the scanner motor starts reversing to return the scanner to the home position.

T5: After the scanner home position sensor has been actuated, the scanner motor rotates forward then reverses to stop the scanner at the correct home position.

2.4.2 ADF Mode

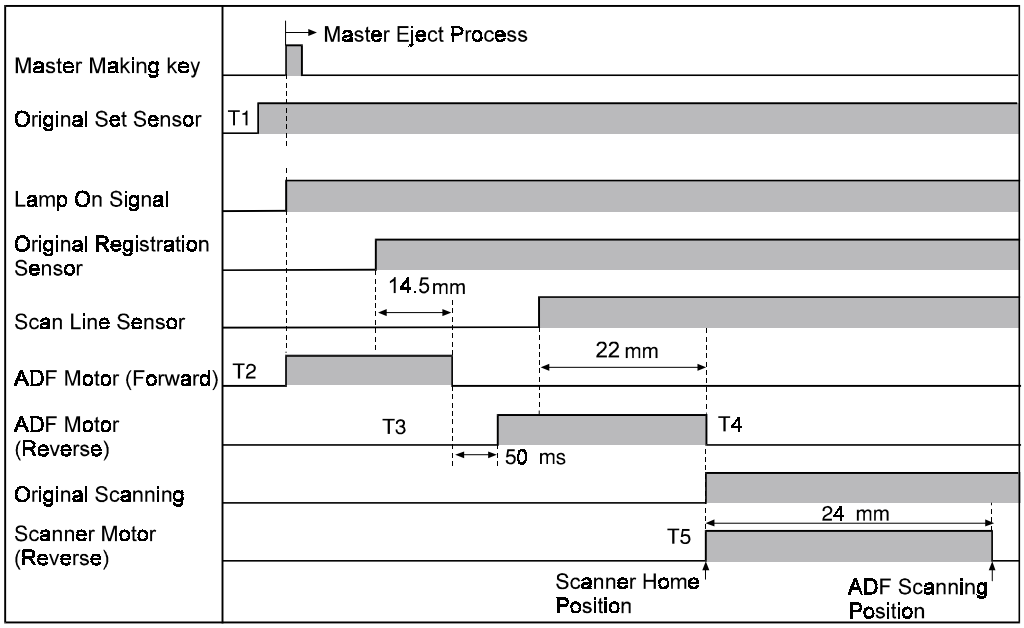

C223D611.wmf

The above timing chart shows scanner timing when an optional ADF has been installed.

T1: When originals are inserted in the ADF unit, the original set sensor is activated.

T2: When the Master Making key is pressed, the ADF motor rotates the pickup roller and the feed roller to feed the bottom original into the ADF.

T3: The ADF motor stops rotating clockwise when the original has been fed 14.5 millimeters after the original registration sensor was activated. After 50 milliseconds, the ADF motor starts rotating counterclockwise to rotate the 1st original transport roller.

T4: The ADF motor stops again when the original has been fed 22 millimeters after the scan line sensor was activated.

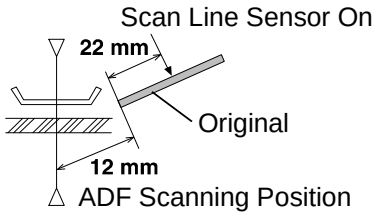

C223D610.wmf

T5: When the ADF motor stops, the scanner motor starts reversing to bring the scanner to the ADF scanning position.

3. MASTER FEED

3.1 OVERALL

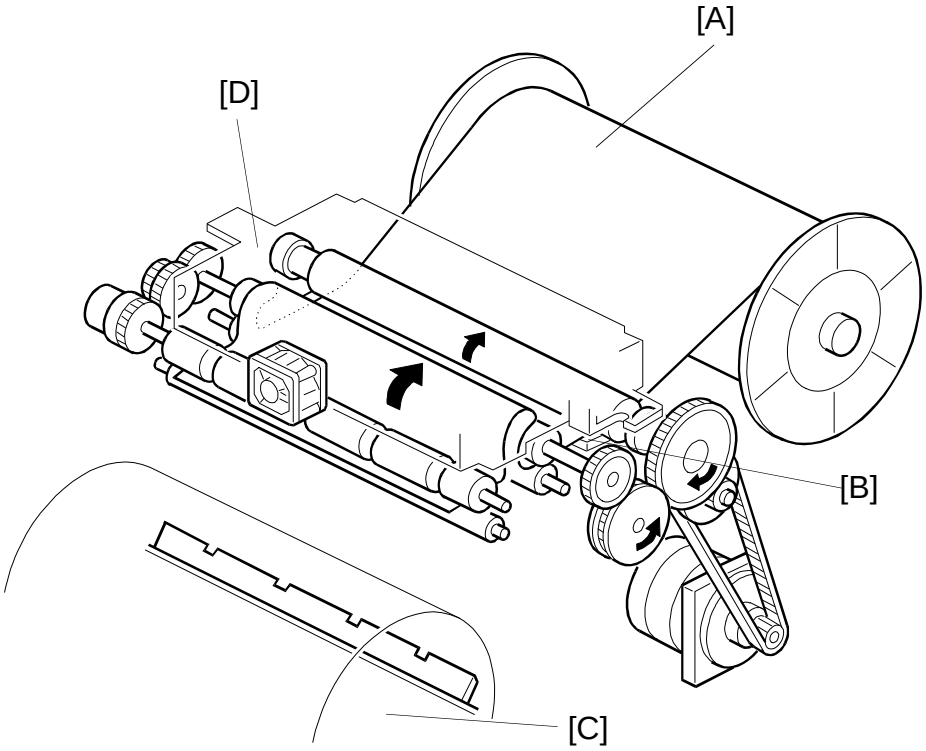

C223D500-1.wmf

The thermal head [B] burns the image (scanned by the CCD) onto the master [A] as it is being fed to the drum [C]. The used master is ejected at the same time that the new master is printed, and the new master is stored in the master box [D] until the old master has been completely ejected. The master is then clamped to and wrapped around the drum.

The master box mechanism reduces the amount of time needed to make a new master, because the new master can be made at the same time that the old one is fed out.

3.2 MASTER FEED CLAMPER OPENING MECHANISM

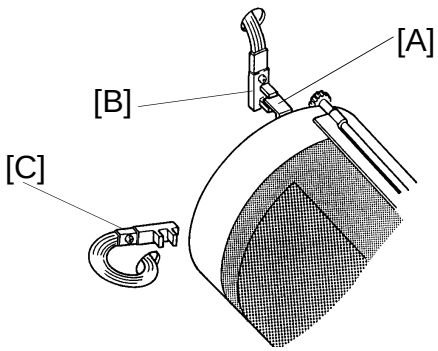

C223D510-2.img

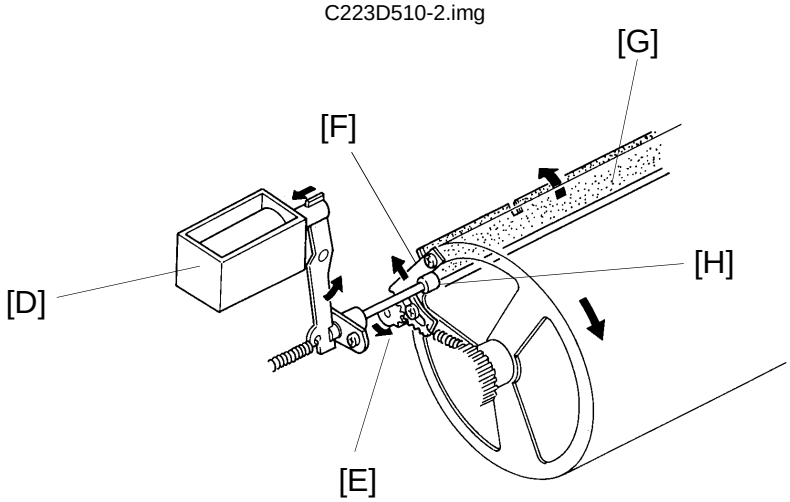

C223D526.img

After the master eject process is finished and the interrupter [A] is positioned in the first drum position sensor [B], the main motor turns on and the drum starts rotating (22 rpm) in reverse (opposite to the printing direction).

When the drum has turned 160 degrees past the actuation position of the second drum position sensor [C], the master feed clamper solenoid [D] turns on, and the cam [H] moves inside the drum.

When the drum has turned another 58.5 degrees, the sector gear [F] rotates upwards as it contacts the cam [H]. This engages the sector gear with gear [E], which turns counterclockwise to open the clamper [G]. At the same time, the drum stops and the clamper remains open to catch and clamp the master's leading edge.

3.3 MASTER FEED MECHANISM

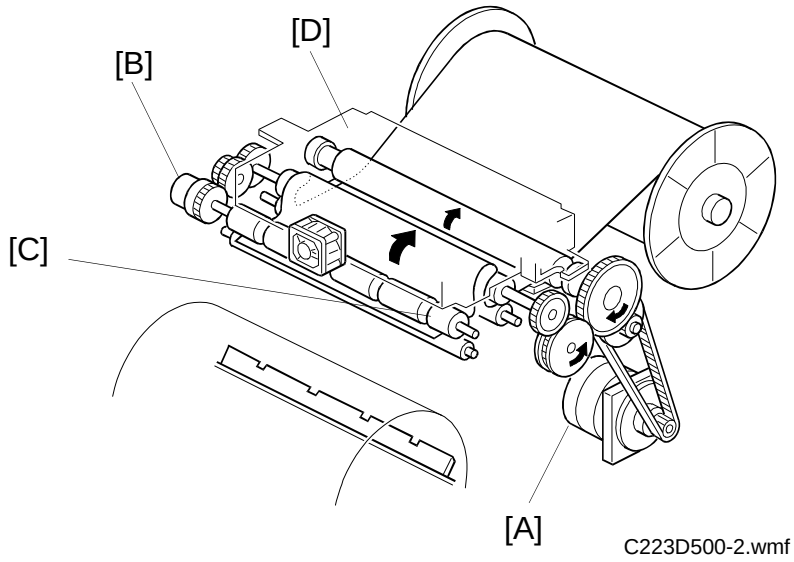

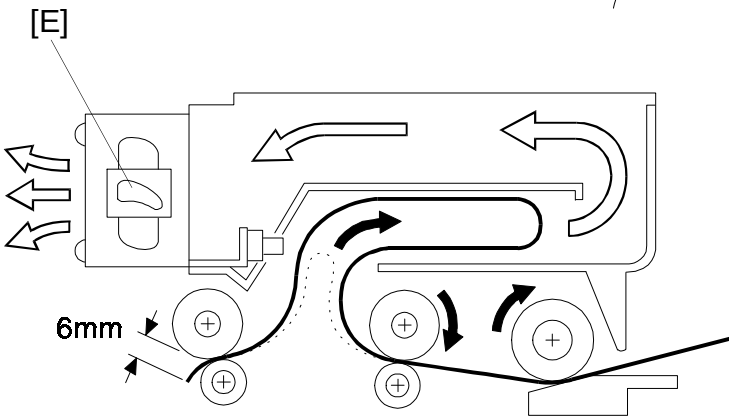

C223D501.wmf

To minimize the first print time, the master making process starts just after the master making key is pressed.

When the master making key is pressed, the drum starts rotating in reverse to eject the master that is wrapped around the drum. At the same time, the master feed motor [A] starts turning and the reverse roller clutch [B] is energized.

When the master has been transported 18.7 mm, the master feed roller and the reverse roller clutch stop. They start again just after original scanning starts.

When the master has been transported a further 10.7 mm (when the leading edge is 6 mm past the reverse roller [C]), the reverse roller clutch is turned off but the master feed motor continues to rotate. As a result, the master leading edge stays at 6 mm past the reverse roller, and the master buckles up behind

the reverse roller. Until the drum comes to the master feed position, the new master fed by the master feed motor during the eject process is stored in the master box [D]. The suction provided by the master buffer fan motor [E] helps to bring the master into the box.

The main results of this mechanism are:

- A much greater length of new master can be made before it starts to be wrapped around the drum.
- The new master can start to be made much earlier during the machine's operation cycle, saving time.

The master buffer fan motor turns on when master making starts, and it stays on until the reverse roller starts feeding the master again to be caught by the master clamp on the drum.

3.4 MASTER WRAPPING MECHANISM

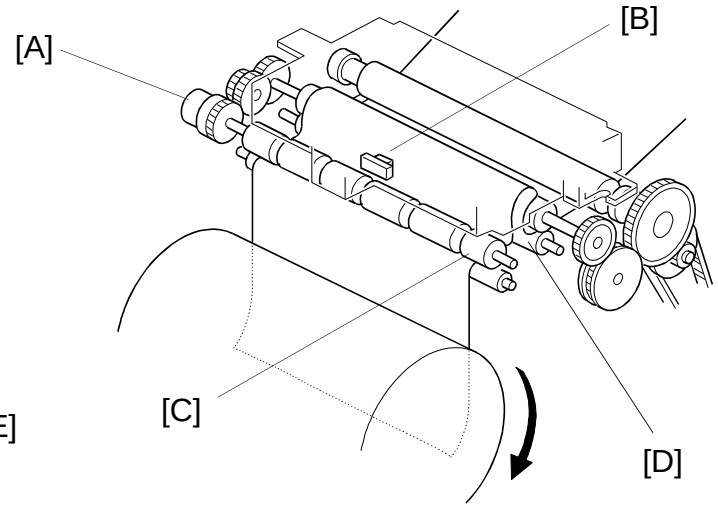

C223D502.wmf

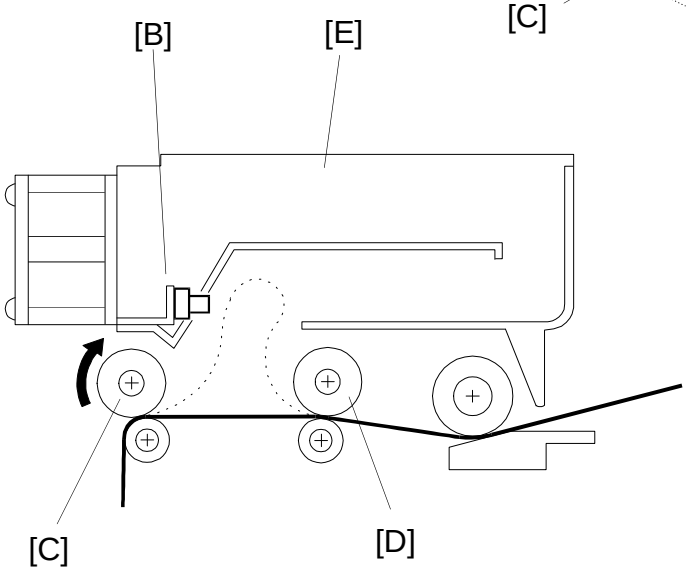

C223D503.wmf

When the drum stops at the master feed position (at this time, the master clamper is open), the reverse roller clutch [A] turns on again. When the master has been transported 18.7 mm and the master leading edge has reached the master clamper, the reverse roller clutch and the master feed clamper solenoids turn off. The master leading edge is clamped by the master clamper.

After the master clamper catches the master leading edge, the drum rotates at 22 rpm while the master buckle sensor [B] is on. The master feed motor continues to feed the master at this stage. The drum pulls the master faster than the master feed motor feeds it, so the master buckle sensor will deactivate eventually. When this happens, the main motor stops until the sensor is activated by the master buckle again. In this way, the master is wrapped around the drum keeping a buckle between the reverse roller [C] and the master feed roller [D]. This buckle prevents the master that is still

under the thermal head from being pulled; if a long master is being made, this will adversely affect copy quality.

When the new master is finished, the master feed speed increases (to 4 times the master making speed) and the master cutter cuts the master when the appropriate length of master has been transported.

Even if a master eject jam occurs, the master making operation continues. When a master eject jam is detected, the machine stops after master making and cutting is done (during this period, the new master is stored in the master box [E]). When the reset key is pressed after the jammed master is removed, the reverse roller clutch turns on to transport the master to the master clamper, and the master clamper clamps the leading edge. The drum rotates at 22 rpm to wrap the master.

3.5 CUTTER MECHANISM

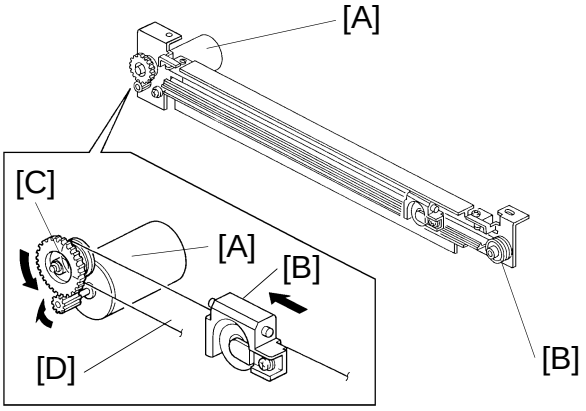

C223D527.img

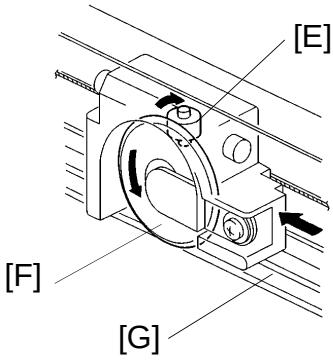

C223D528.img

After the master making process is finished, the master feed motor turns off and the cutter motor [A] starts turning.

The cutter motor [A] starts turning in reverse (see the arrows) when the cutter holder [B] pushes the left cutter switch at the front (operation side) end of the cutter rail; this is the cutter holder home position. This drives the cutter holder [B] toward the rear (non-operation side) by means of the gear/pulley [C] and the wire [D] on which the cutter holder [B] is fixed.

When the cutter holder reaches the rear end of the cutter rail and pushes the right cutter switch, the cutter motor [A] changes its rotation direction, and the cutter holder [B] starts moving toward the front. The cutter motor [A] stops turning when the cutter holder [B] is back at its home position and pushes the left cutter switch. The master cutting process is now finished.

While the cutter holder [B] is traveling to the rear, the roller [E] in the cutter holder is turning clockwise because it touches the cutter rail. The roller [E] rotates the cutter blade [F] as indicated by the arrow. The master is between the blade and blade plate [G] and as the cutter moves, it cuts the master. The blade plate also serves as a lower guide plate for the master.

After the master cutting process is finished, the master is fed another 40 millimeters and the master feed process is finished.

3.6 ELECTRICAL TIMING

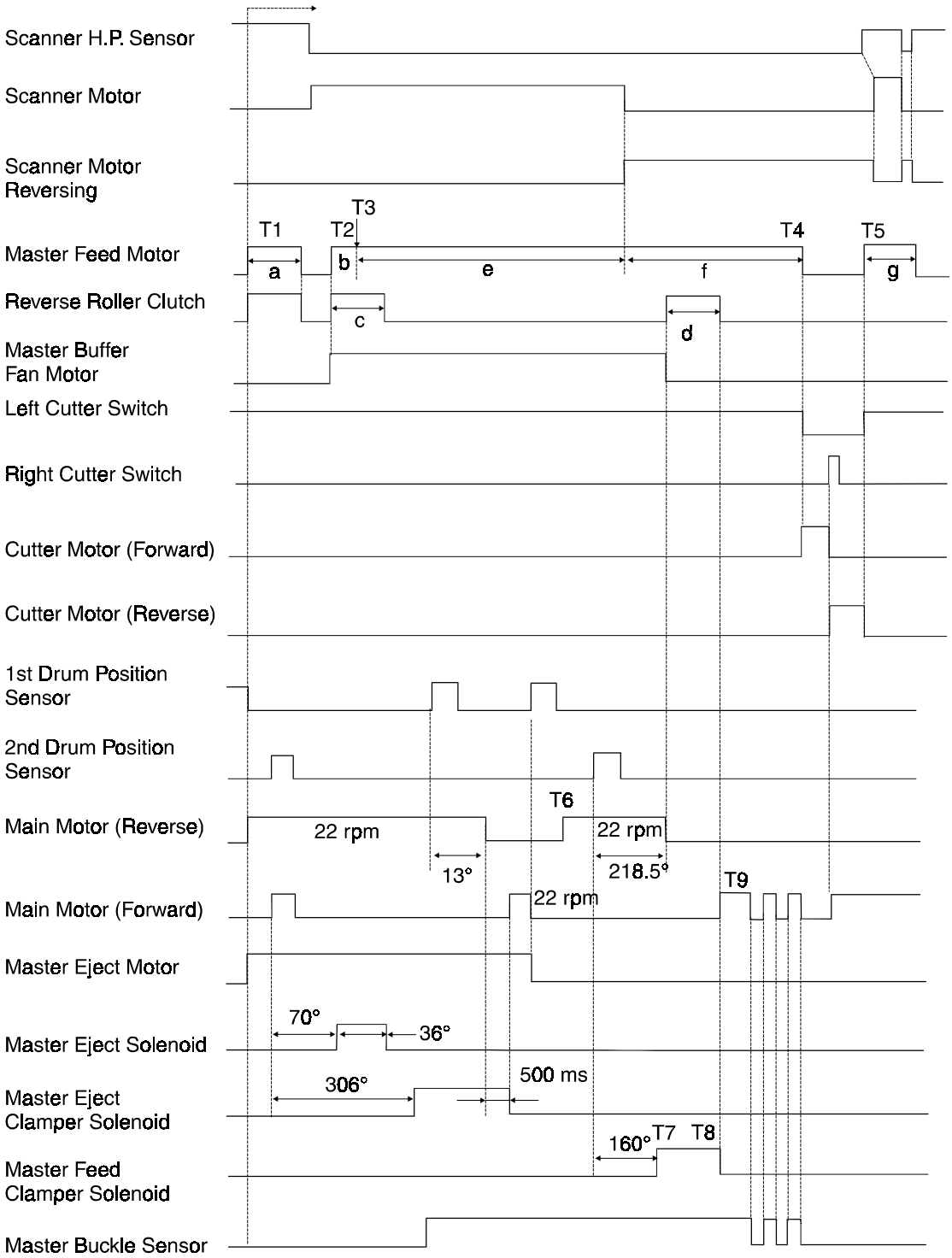

C223D609.wmf

Detailed Descriptions

Master Feed Lengths

a: 18.7 mm
b: 0.7 mm
c: 10.7 mm
d: 13.7 mm
e: 420 mm
f: 60 mm (211 mm: A4/LT drum)
g: 40 mm (61 mm: A4/LT drum)

– Master Feed –

T1: When the master making key is pressed, the main motor starts reverse rotation at 22 rpm. At the same time, the master feed motor and the reverse roller clutch turn on to feed the master 18.7 mm. Then they switch off, and the scanner motor turns on shortly afterwards.

T2: When the scanner motor has moved 20 mm from the home position, the master feed motor, master buffer fan motor, and the reverse roller clutch turn on.

T3: The thermal head starts when the master has been transported 1 mm.

T4: When the master has been transported 499.4 mm, the master feed motor stops. At the same time, the cutter motor starts rotating to cut the master. When the right cutter switch is actuated, the cutter motor starts reversing. When the left cutter switch is actuated, the cutter motor stops.

T5: When the left cutter switch is actuated, the master feed motor starts again to feed the master 40 mm.

– Master Wrapping –

T6: After the master eject operation is finished, the main motor rotates in reverse at 22 rpm. The main motor stops when the drum has rotated 220 degrees.

T7: When the drum has rotated 160 degrees past the 2nd drum position sensor, the master feed clamper solenoid turns on.

T8: When the drum stops at the master feed position, the master buffer fan motor turns off. At the same time the reverse roller clutch is de-energized. When the master has been transported 13.7 mm, the reverse roller clutch and the master feed clamper solenoid turn off.

T9: When the master has been clamped, the main motor starts rotating to wrap the master around the drum. The motor rotates at 22 rpm only when the master buckle sensor is activated.

4. PAPER FEED

4.1 OVERALL

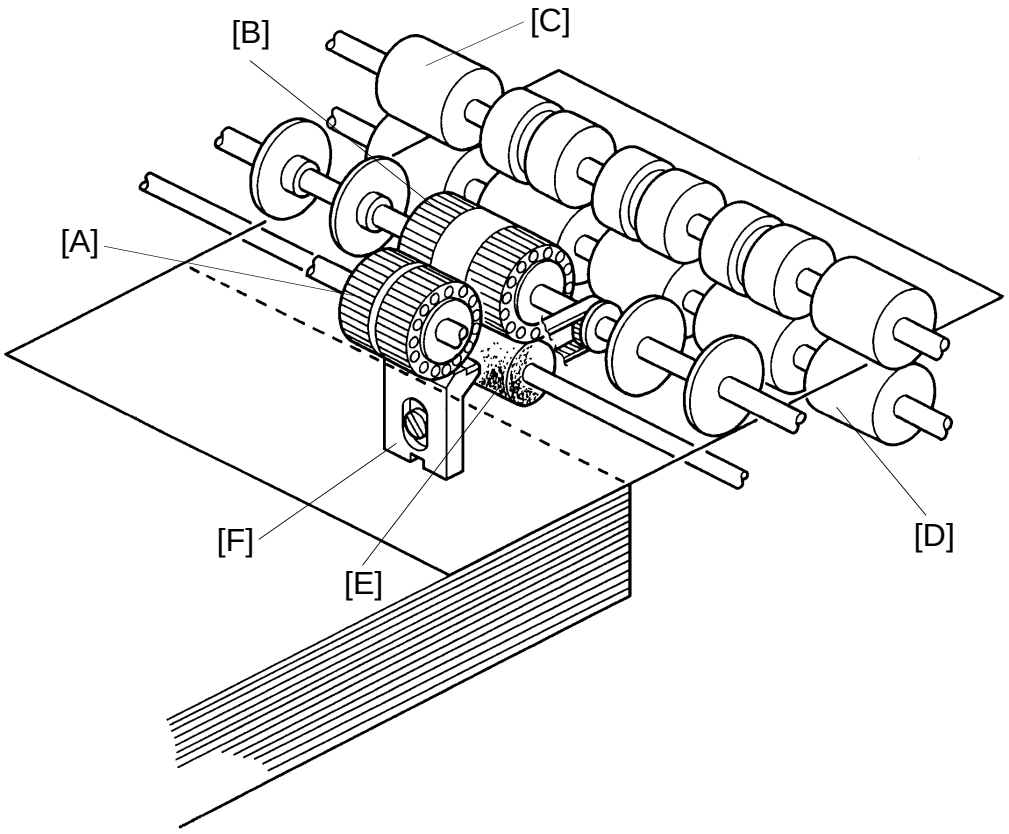

C223D602.img

This mechanism uses a center separation system, which consists of the separation plate [F], upper separation roller [B], and lower separation roller [E]. Because of the separation system, if a few sheets of paper are picked up from the paper stack (on the paper table) by the paper feed roller [A], only one sheet of paper is transported to the second upper feed roller [C] and second lower feed roller [D].

4.2 PAPER FEED ROLLER/UPPER SEPARATION ROLLER MECHANISM

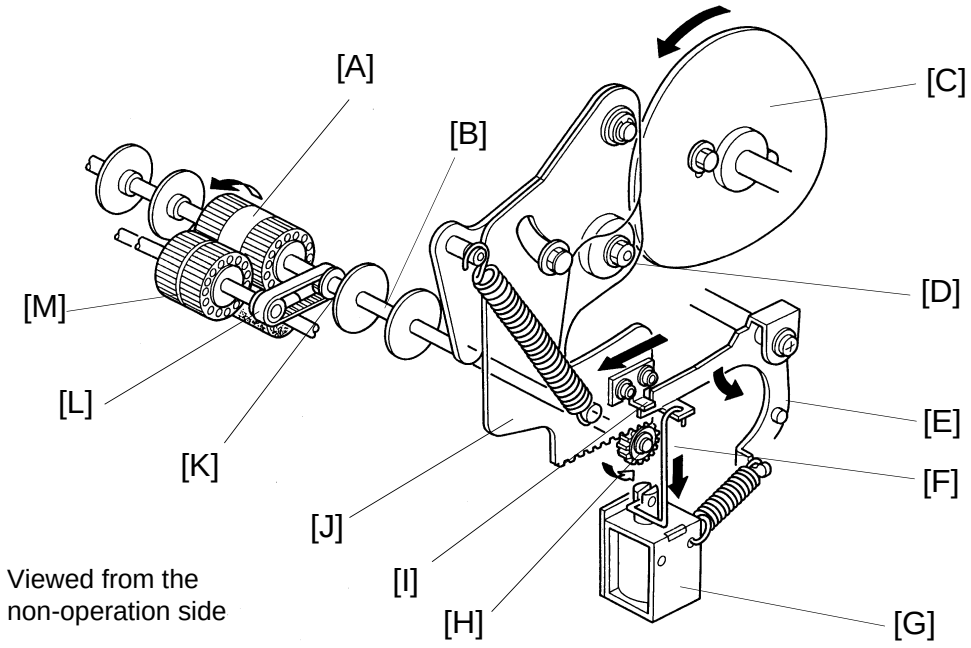

C223D603.img

The main motor drives the paper feed roller cam [C], which moves the sector gear back and forth. The sector gear [J] rotates the paper feed roller [M] and the upper separation roller [A]. A one-way clutch inside gear [H] prevents the rollers from rotating in reverse during the return half of the sector gear movement cycle. The cam rotates once per sheet of paper.

When the paper feed solenoid [G] turns on, it pulls the link [F] away from the sector gear to allow it to rotate. When the cam roller [D] is at the widest part of the paper feed roller cam [C], the sector stopper [E] drops away in a counterclockwise direction as a clearance is formed between the stopper and pin [I]. Then, the cam roller [D] on the sector gear is able to move along the surface of the cam [C]. The solenoid [G] stays on during the copy cycle.

When the narrowest part of the paper feed roller cam [C] is rotating away from the cam roller [D] and the widest part is approaching, the sector gear [J] turns clockwise and the gear [H] is turned counterclockwise. The rotation of the gear [H] is transmitted to the upper separation roller shaft [B], and the upper separation roller [A] turns counterclockwise. At the same time, the pulley [K] on the upper separation roller shaft [B] turns, and the belt [L] rotates the paper feed roller [M] counterclockwise to feed the printing paper.

When the narrowest part of the paper feed roller cam [C] approaches the cam roller [D] again, the sector gear [J] turns counterclockwise and the gear [H] is turned clockwise. However, a one-way clutch inside the gear [H] prevents the upper separation [A] and paper feed rollers [M] from turning.

4.3 FEED ROLLER PRESSURE MECHANISM

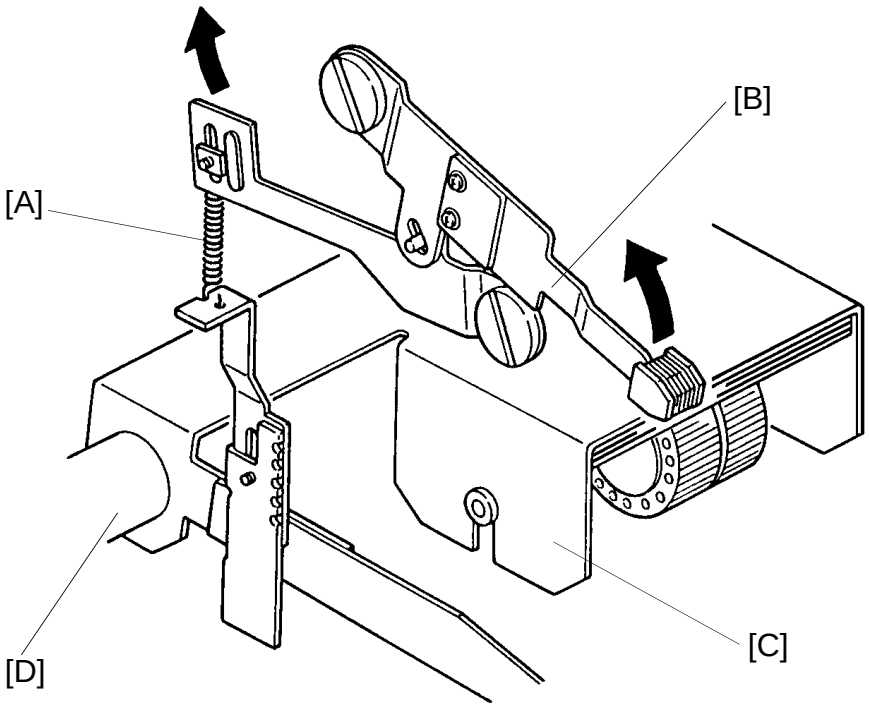

C223D606.img

Due to the weight of the feed roller assembly [C], the paper feed roller presses the paper stacked on the paper table. This is because the feed roller assembly rotates freely around its shaft [D].

The spring [A] applies tension to the feed roller assembly in the direction in which the paper feed roller is pulled up. When the feed pressure lever [B] is moved up, the spring [A] is stretched. Thus, the tension of the spring is increased, weakening the feed roller pressure.

Originally, the feed pressure lever is in the up position. When thick paper (132.5 to 215 g/m^2, or 35.2 to 57 lb) is used and frequently paper is not fed, push down the feed pressure lever. The feed roller pressure will increase.

4.4 PAPER SEPARATION MECHANISM

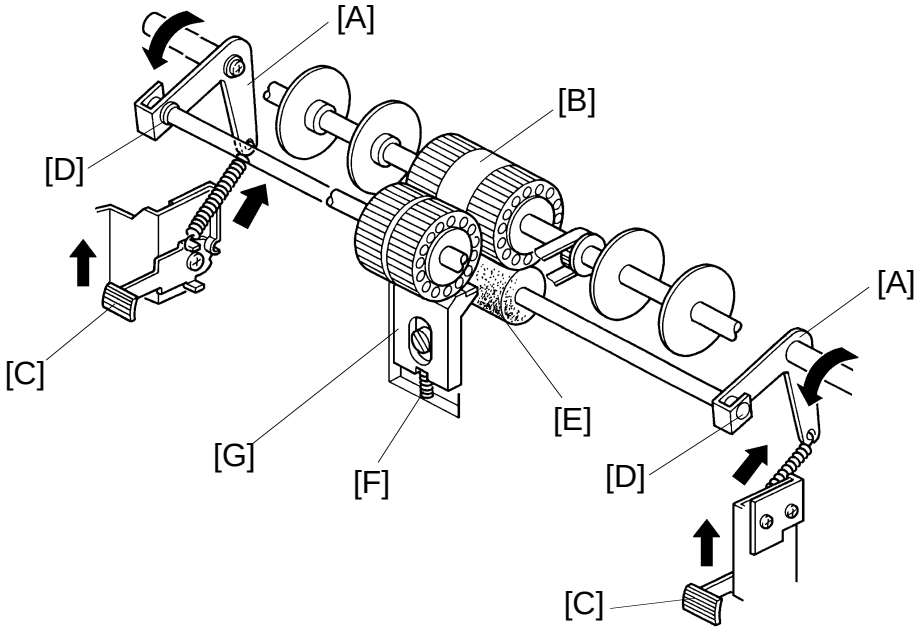

C223D604.img

Pressure from spring [F] holds the separation plate [G] against the upper separation roller. A rubber pad on top of the separation plate allows only a few sheets of paper to reach the lower separation roller. If too many sheets of paper are fed to the lower separation roller at the same time, the lower separation roller may not be able to separate the sheets; it can separate only two or three sheets of paper.

Springs pull lever [A] and this pushes up the lower separation roller [E]. Then this roller presses the sheets to be fed against the upper separation roller [B]. Also, the lower separation roller does not turn in the paper feeding direction. (It turns in the opposite direction due to the one-way clutch bearings [D] provided on both right and left separation levers [A].) When two or more sheets of paper are fed, a brake force is applied to the lower sheets of paper due to the friction between the paper and the lower separation roller. Then, the sheets are separated and one sheet of paper is fed to the second feed rollers.

The pressure between the upper and lower separation rollers can be adjusted by changing the right and left separation pressure adjusting levers [C] as follows (this is a user-level adjustment):

Levers Up:	Separation pressure decreases.
Levers Down:	Standard position.

When dog-eared or wrinkled prints are delivered, the separation pressure should be decreased.

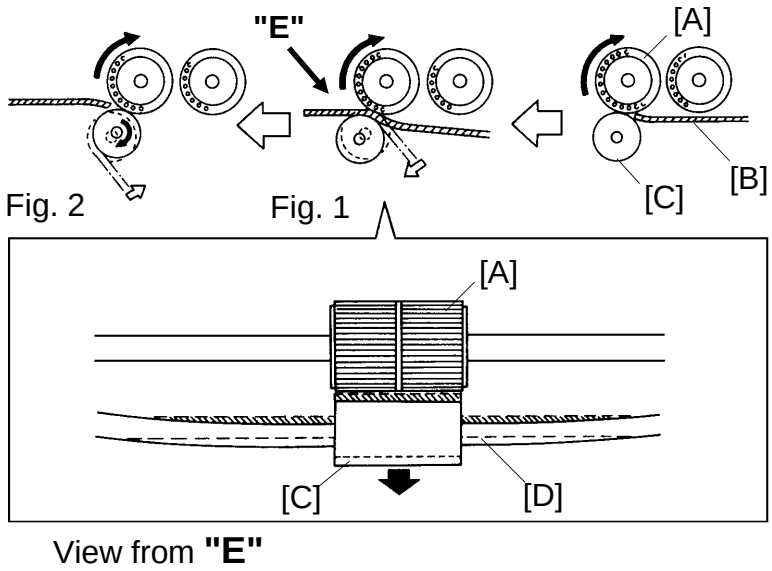

C223D523.img

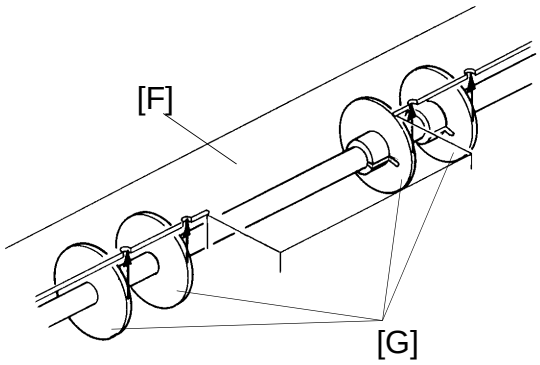

C223D524.img

The lower separation roller [C] turns slightly (see the arrow in Fig. 2) due to the one-way clutch bearings when paper passes through the roller. The lower separation roller [C] and its shaft [D] are pushed down slightly by the paper [B] when the upper separation roller [A] is feeding the paper (Fig.1). Just when the paper is fed out from the rollers, the lower separation roller [C] and its shaft [D] spring back against roller [A] (Fig. 2). This rotates the lower separation roller and ensures that it will wear evenly.

Four paper guide rollers [G] are there to reduce curl in the paper's leading edge, and to feed the paper smoothly to the guide plates. There are four marks on the bracket [F] corresponding to the roller positions as shown in the lower diagram.

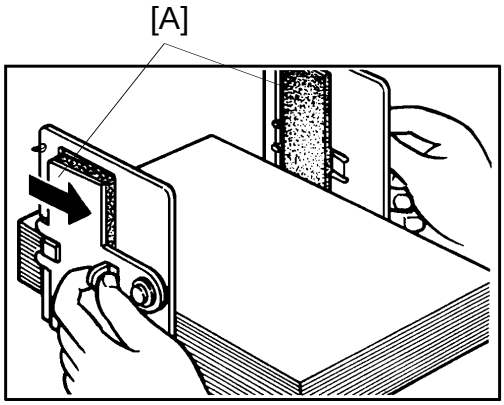

C223D529.img

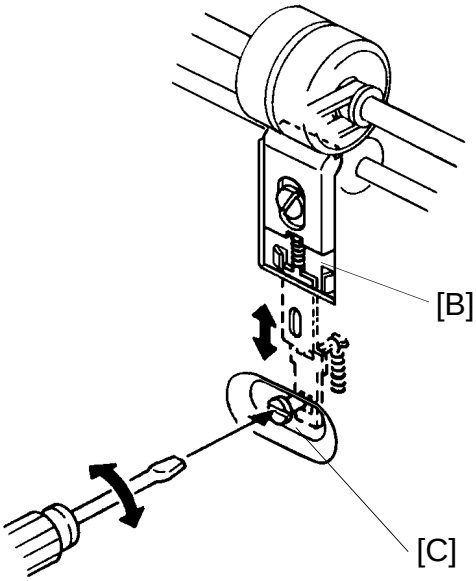

C223D530.img

The side pads [A] in the front and rear paper side guides prevent multiple feed. These are especially useful when thin paper is used. After adjusting the paper side plates to the proper paper width (so that they touch the paper lightly), move the front and rear side pad levers to the right (as viewed from the operation side of the machine). Normally, the pressure from the side pads should be released by moving the levers to the left.

The separation plate pressure can be adjusted to match the type of paper being used. The plate which supports the pressure plate spring [B] can be moved up or down by turning the eccentric cam shaft [C] (this is a service-level adjustment only).

If multiple paper feed frequently occurs, the plate should be moved up.
If paper misfeeds frequently, the plate should be moved down.

4.5 SEPARATION ROLLER PRESSURE RELEASE MECHANISM

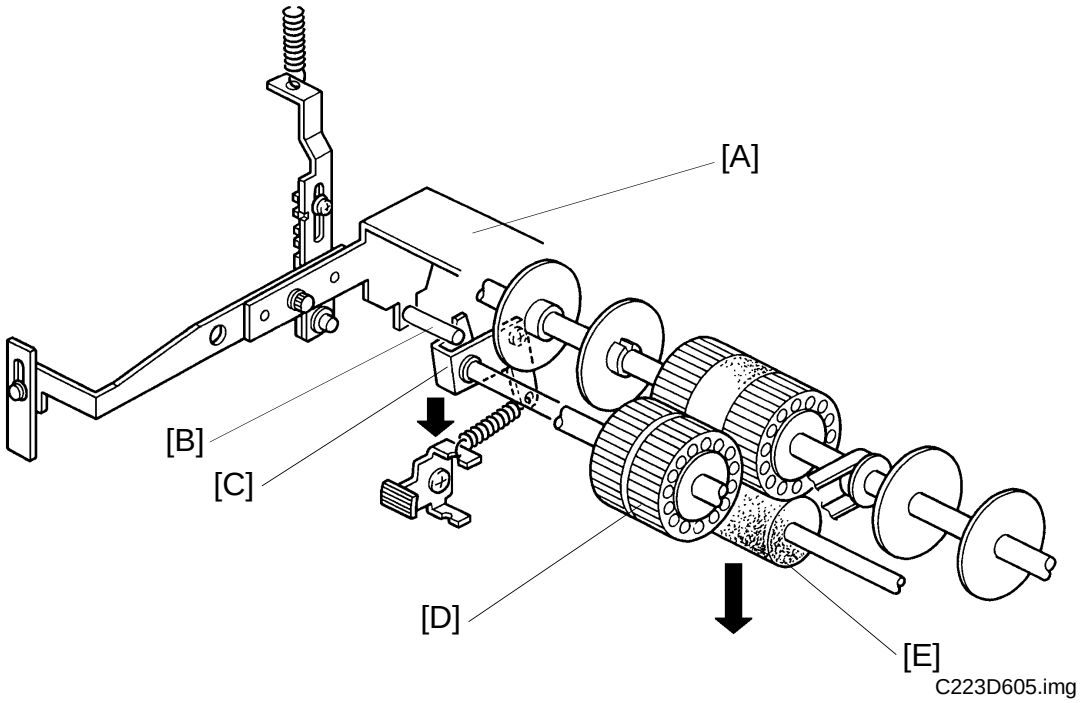

When printing is finished or a misfeed occurs, the paper table drive motor rotates for 500 milliseconds to lower the paper table. The paper on the paper table moves down from the paper feed roller [D] and the paper feed bracket [A] is pulled down by its own weight.

At this time, the shaft [B] pushes down the left separation lever [C] and this moves the lower separation roller [E] slightly downward.

This mechanism makes it easier to remove paper caught between the upper and lower separation rollers.

4.6 SECOND FEED ROLLER MECHANISM

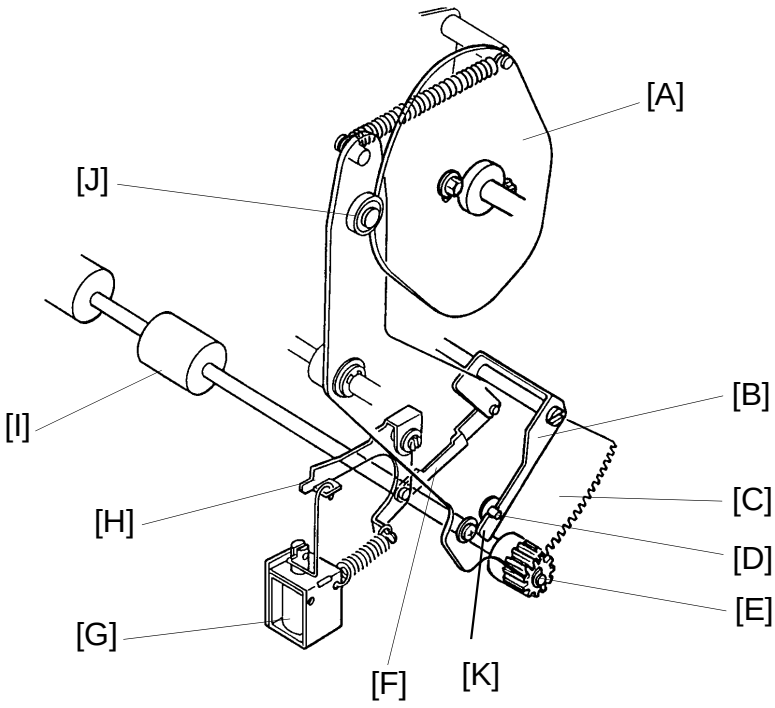

C223D531.img

Drive Mechanism

The main motor drives the lower second feed roller cam [A], which moves the sector gear [C] back and forth. The sector gear [C] rotates the lower second feed roller [I]. A one-way clutch inside the feed roller gear [E] prevents the roller from rotating in reverse during the return half of the sector gear movement cycle. The cam rotates once per sheet of paper.

When the paper feed solenoid [G] turns on, it pulls link [F], the 1st paper feed roller sector gear stopper [H], and the 2nd feed roller sector gear stopper [K].

The bearing [J] on the sector gear moves along the cam surface. When the widest part of the cam comes to the bearing [J], the stopper [B] is released from the sector gear as a clearance is formed between the pin of the sector gear [D] and the stopper [K].

When the feed roller gear turns counterclockwise, its rotation is not transmitted to the lower second feed roller due to the one-way clutch bearing in the gear.

When the narrowest part of the second feed roller cam moves away from the bearing [J], the sector gear turns counterclockwise and the feed roller gear turns clockwise. As the rotation of the feed roller gear is transmitted to the lower second feed roller, the lower second feed roller turns clockwise to feed the paper to the drum.

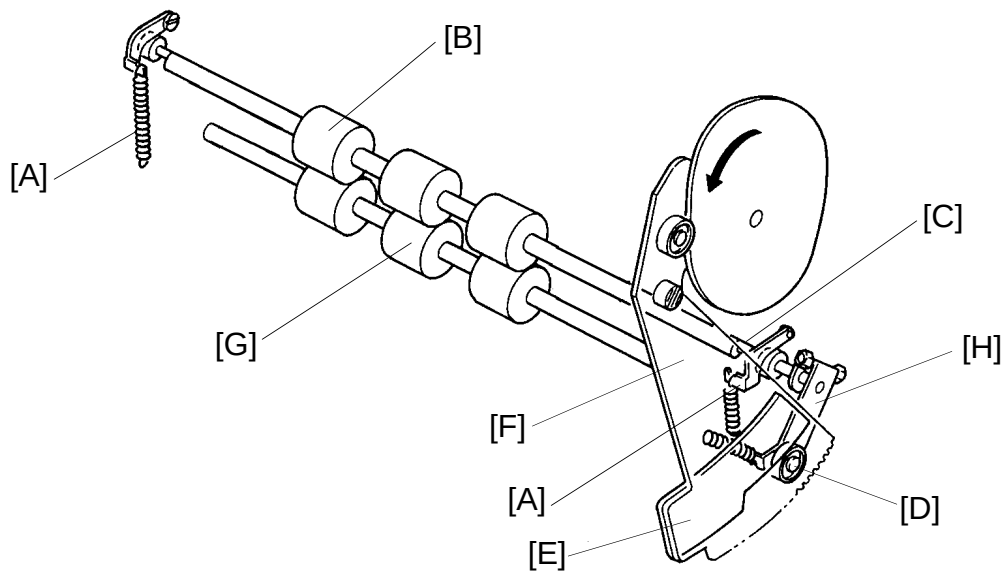

C223D542.img

Release Mechanism

This mechanism releases the upper second feed rollers [B] from the lower one [G] after the press roller and the drum catch the paper leading edge.

The mechanism is made up of several parts. First, a cam which transmits motion to a sector gear [F]; then another cam [E] that is part of the sector gear. This cam pushes a bearing [D], which causes the lever [H] attached to this bearing to turn the upper feed roller shaft [C] so that the upper rollers contact the lower rollers.

At the beginning of each cycle the upper and lower rollers are away from each other. They come together halfway through the cycle and at the end of the cycle they separate again.

At first, the rollers are separate, and the sector gear [F] is ready to start moving clockwise. The bearing [D] on the lever [H] is in contact with the cam [E] on the sector gear. As the gear turns clockwise, it causes the cam to turn the lever in the same direction (clockwise).

The lever then lowers the upper roller [B]. It does this by turning the roller's eccentric shaft [C]. The shaft is a little off center, so when the shaft turns the roller, the roller moves up or down.

When the cycle is halfway through, the sector gear has reached its maximum clockwise position. Now the upper roller touches the lower one and a pair of springs [A] apply tension at each end of the upper roller. Until now the lower roller has not turned.

At this point, the paper arrives from the first paper feed rollers. The leading edge hits the two rollers and the paper buckles slightly. This ensures that the paper will go into the rollers straight.

The lower roller now begins turning and feeds the paper to the drum section. The sector gear is now turning counterclockwise, raising the upper roller. The gear returns to its original position and the cycle is now over.

Service Note

The paper buckles slightly as the leading edge of the paper arrives from the first paper feed rollers before the second paper feed rollers start to turn. The second feed roller start timing can be adjusted to change the leading edge margin. See "Removal and Adjustment: Second Feed Roller Start Timing".

4.7 PAPER TABLE SIDE ADJUSTMENT MECHANISM

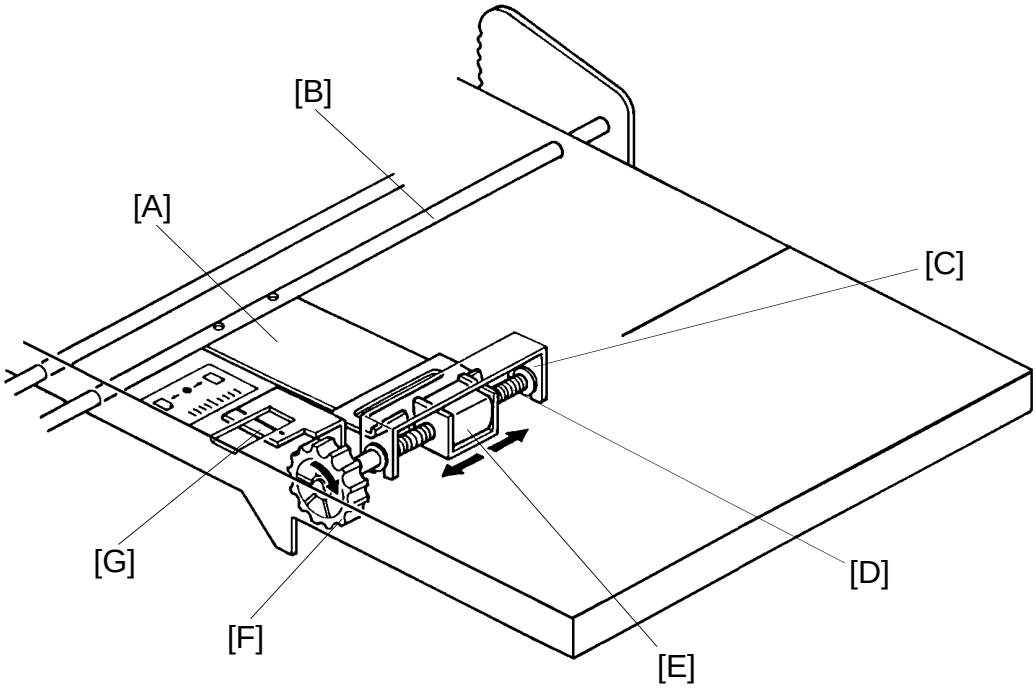

C223D532.img

The shaft [D] of the fine adjustment dial [F] is threaded. The inside of the sleeve [E] is also threaded. The sleeve is fixed to the paper table stay [B] through a bracket [A].

The paper table bracket [C] mounted under the table is fixed to both ends of the adjustment dial shaft. When the adjustment dial is turned clockwise, the feed table bracket [C] and the paper table move to the right.

The indicator [G] fixed to the bracket [A] shows how much the paper table has moved.

4.8 PAPER TABLE UP/DOWN MECHANISM

There are diagrams of this mechanism on the following page.

The paper table is raised and lowered by the paper table drive motor.

The paper end sensor [E] (a reflective photosensor) is actuated when the paper is placed on the paper table. When the Print Start key is pressed, the paper table drive motor [H] starts turning clockwise and the worm gear [G] also turns. The gear [F] turns clockwise and both gears [D] turn to raise the racks [C].

As the paper table rises, the paper pushes against the paper feed roller [I]. This raises the lever [J] which is mounted on the paper feed bracket. This activates the paper table height sensor [K] (the phototransistor detects the light from the photocoupler, which up to now was cut off by the lever), and that causes the paper table motor [H] to turn off and stop raising the paper table.

As printing proceeds and the paper level runs down, the lever [J] cuts off the light path in the photocoupler and the motor [H] turns clockwise until the phototransistor is reactivated. As a result, the top of the paper stack is constantly kept at the correct height.

When no paper is present, the paper end sensor [E] is not activated and the motor [H] turns counterclockwise to lower the paper table. The paper table is lowered until the actuator [A] (fixed to the front rack) interrupts the lower limit sensor [B].

When a misfeed occurs or printing is finished, the paper table motor [H] turns counterclockwise for 500 milliseconds, slightly lowering the paper table.

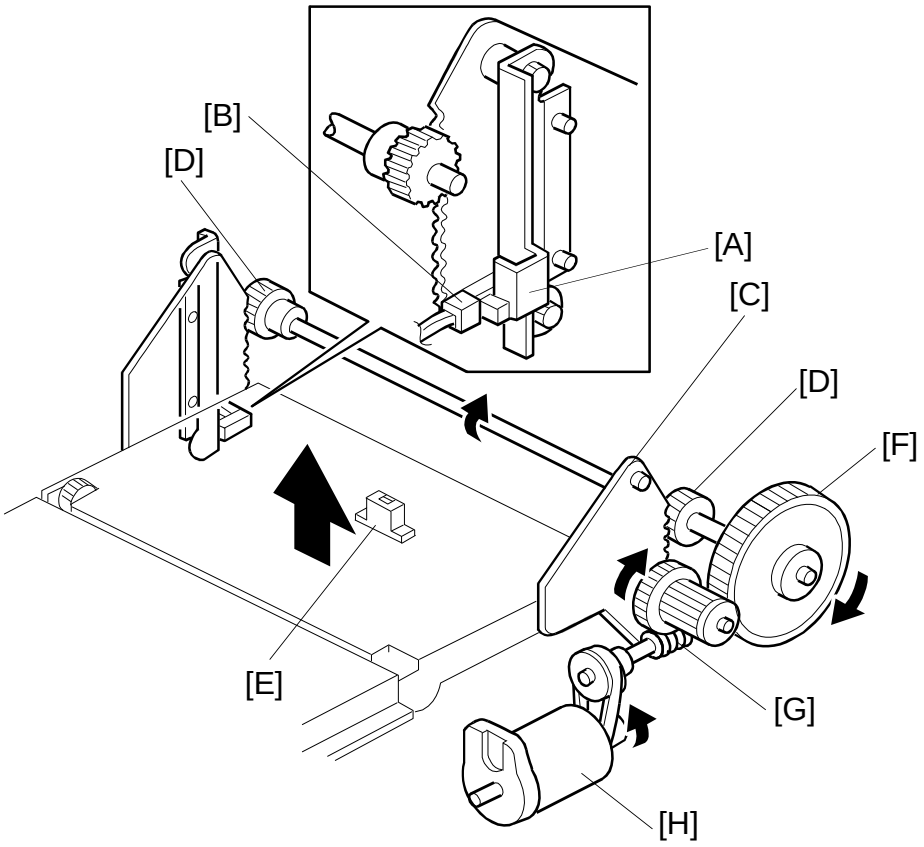

C223D533.img

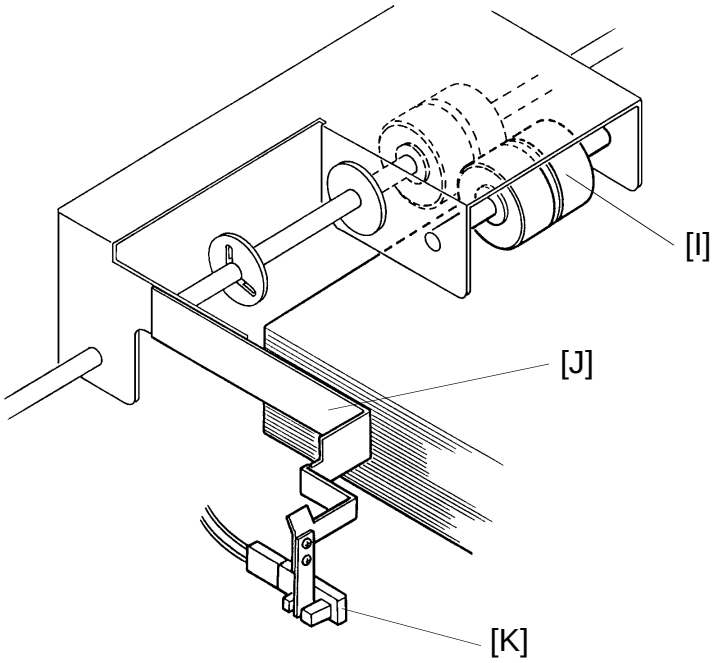

C223D534.img

4.9 PAPER SIZE DETECTION

The machine determines the printing area of the master based on the detected paper size and the original length (which is detected during the original scanning process). If the original size is different from the paper size, the machine compares the lengths of the original and the paper. The master's length will be the shorter of the two. The printing width of the master is determined by the paper width.

Note: The determined master printing area is not changed if the paper on the paper table is replaced with another size of paper during the master making process.

The printing area of the master for each detected paper size is as follows:

Paper Size	Printing Area of the Master	
	Width (mm)	Length (mm)
A3	292	412
B4	256	356
A4	208	289
A4-S	292	202
B5	180	249
B5-S	256	174
A5	146	202
DLT	278	412
LG	214	348
LT	214	271
LT-S	278	208
HLT	138	208

S: Sideways feed

The machine can only distinguish standard sizes. If a non-standard paper size or original size is used, the machine will determine a standard size for the non-standard sized paper or original. If the actual paper size, the non-standard sized paper, or the original is larger than the determined paper size, the excess area will not be transferred to the master. In such a case, paper size detection can be canceled using SP mode (no. 142-1) in order to obtain the entire image of the original. However, the press roller may become contaminated with ink if the paper is smaller than the image on the master. The ink will be transferred to the back side of the prints when the next printing is done with larger paper.

Paper Size Detection for the Paper Table

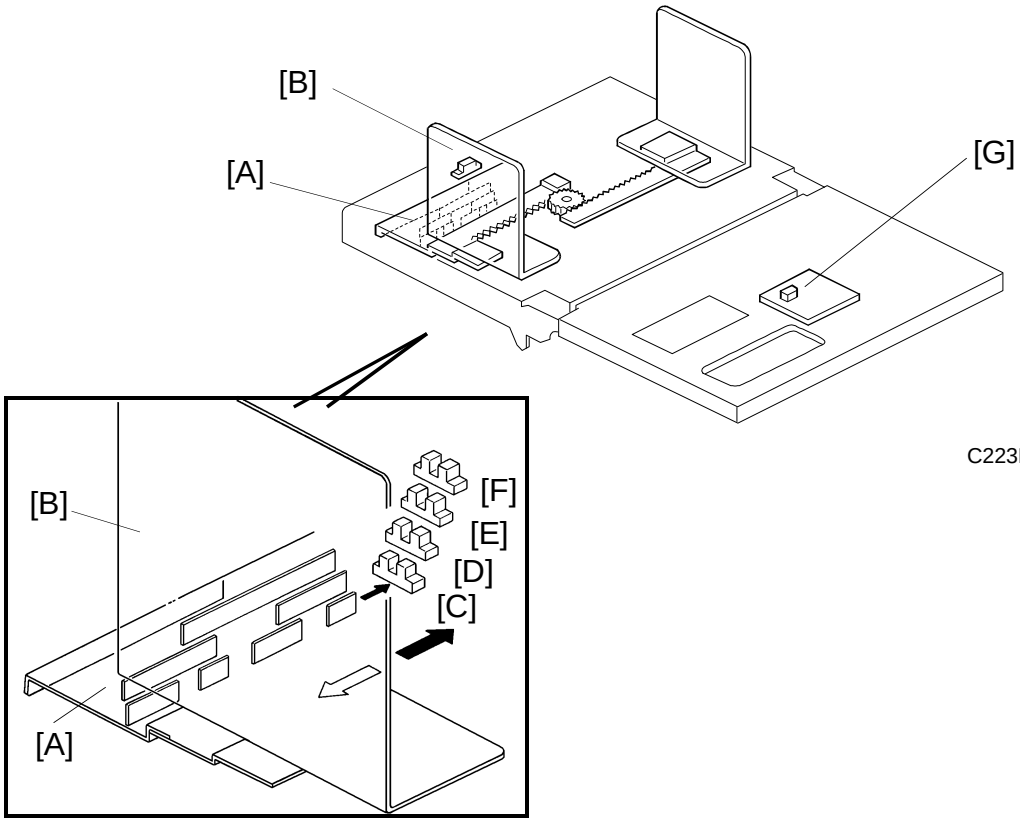

C223D566.wmf

C223D536.img

The paper width detection plate [A] behind the front paper side guide [B] has several interrupters.

The front and rear paper side guides are adjusted to the paper width. Depending on which paper width sensors ([C] [D] [E] [F]; 4 photointerrupters) are interrupted and whether the paper length sensor [G] (a reflective photosensor) is activated, the machine determines the paper size as shown in the table below.

Paper Size	A4-S	LT-S	B5-S	LT	A4		B5	A5	HLT		A3	DLT	B4	LG
Paper Width Sensor-0 [C]	o	x	o	x	x	x	o	x	x	o	o	x	o	x
Paper Width Sensor-1 [D]	x	o	o	x	x	x	o	o	o	o	x	o	o	x
Paper Width Sensor-2 [E]	x	x	o	o	o	o	o	x	x	x	x	x	o	o
Paper Width Sensor-3 [F]	x	x	x	x	x	o	o	o	o	o	x	x	x	x
Paper Length Sensor [G]	x	x	x	x	x	x	x	x	x	x	o	o	o	o

x: Not blocked or Not activated, o: Blocked or Activated
S: Sideways feed

4.10 NOISE REDUCTION COVER

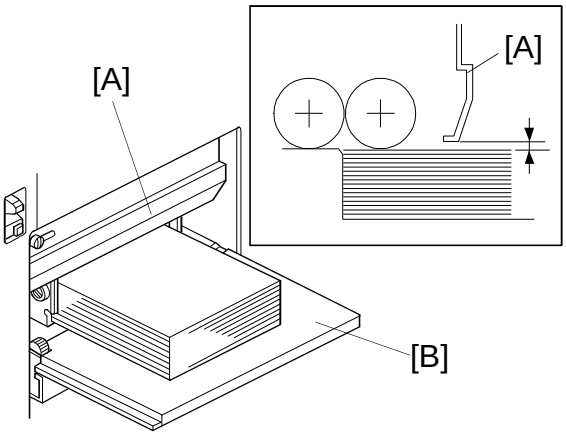

C223D621.wmf

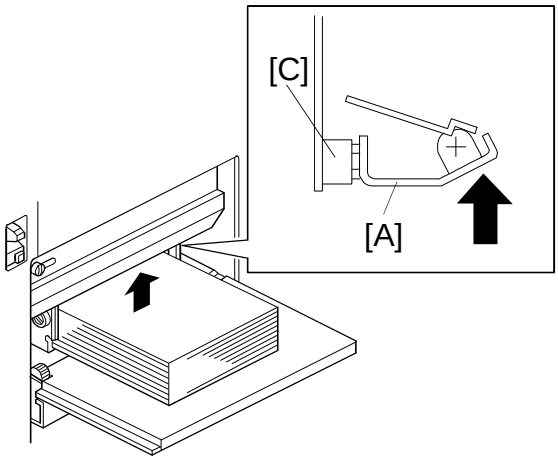

C223D622.wmf

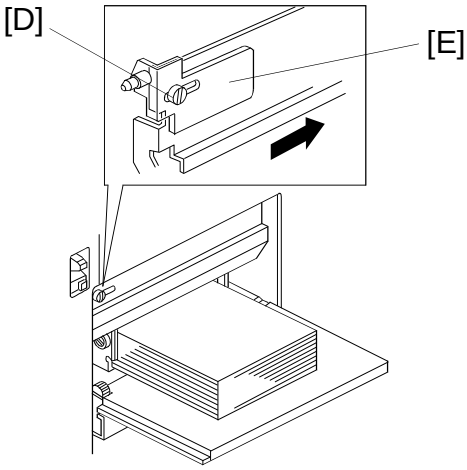

C223D623.wmf

The noise reduction cover [A] reduces the paper feed noise. When the paper feed table [B] is in the paper feed position, there is a small clearance between the paper stack and the noise reduction cover.

The noise reduction cover can be folded back when a user puts paper on the table. The magnet [C] catches the cover to keep it in the upper position.

By loosening the screw [D], the bracket [E] can be slid in the arrow direction and the noise reduction cover can be removed from the machine.

4.11 ELECTRICAL TIMING

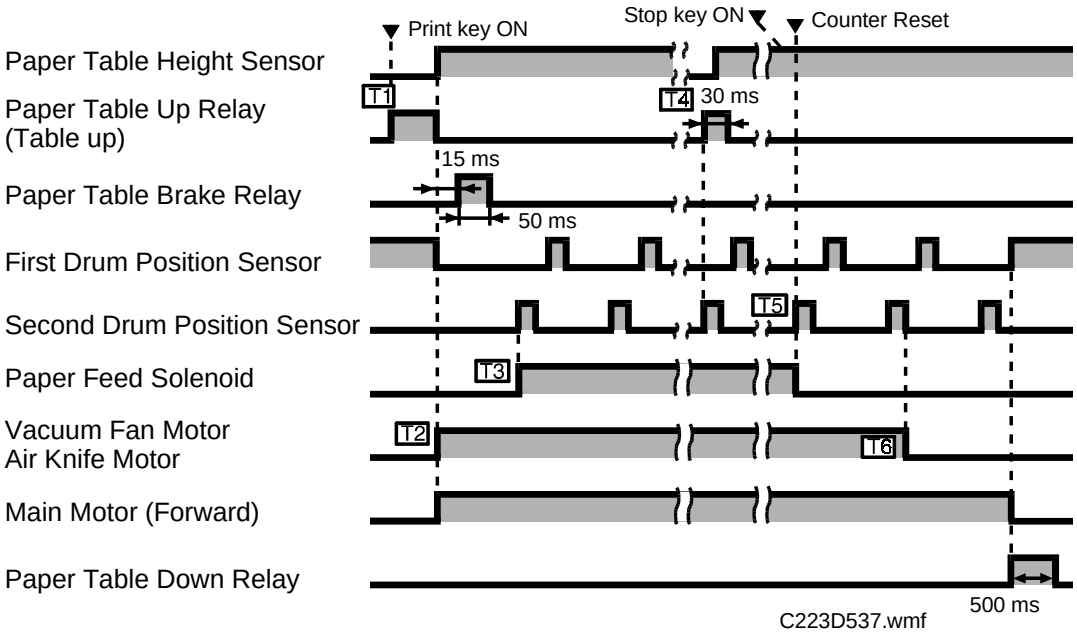

T1: When paper is placed on the paper table and the Print key is pressed, the paper table moves up until the paper table height sensor is activated. 15 milliseconds after the height sensor is activated, the paper table brake signal turns on for 50 milliseconds to apply braking force to the paper table drive motor to prevent the paper table from overrunning.

T2: When the height sensor is activated, the vacuum fan motor and air knife motor turn on. At the same time, the drum (main motor) starts turning forward (this is the printing direction).

T3: The paper feed solenoid is energized when the interrupter at the rear side of the drum activates the second drum position sensor.

T4: After the paper is fed, the top of the paper stack is a little lower and the height sensor is de-activated. When the second drum position sensor is activated, the paper table drive motor starts rotating. This lifts the paper table until the height sensor is re-activated (approximately 30 milliseconds after the motor starts). When the height sensor is re-activated, the motor stops rotating.

T5: After the Stop key is pressed, the paper feed solenoid is de-energized the next time that the second drum position sensor is activated. The counter on the operation panel will be reset at this time.

T6: When the second drum position sensor is again activated after one more drum rotation, the vacuum fan motor and air knife motor turn off. Then, the drum rotates once more and stops at the first drum position actuation position (the drum home position).

5. PRINTING

5.1 OVERALL

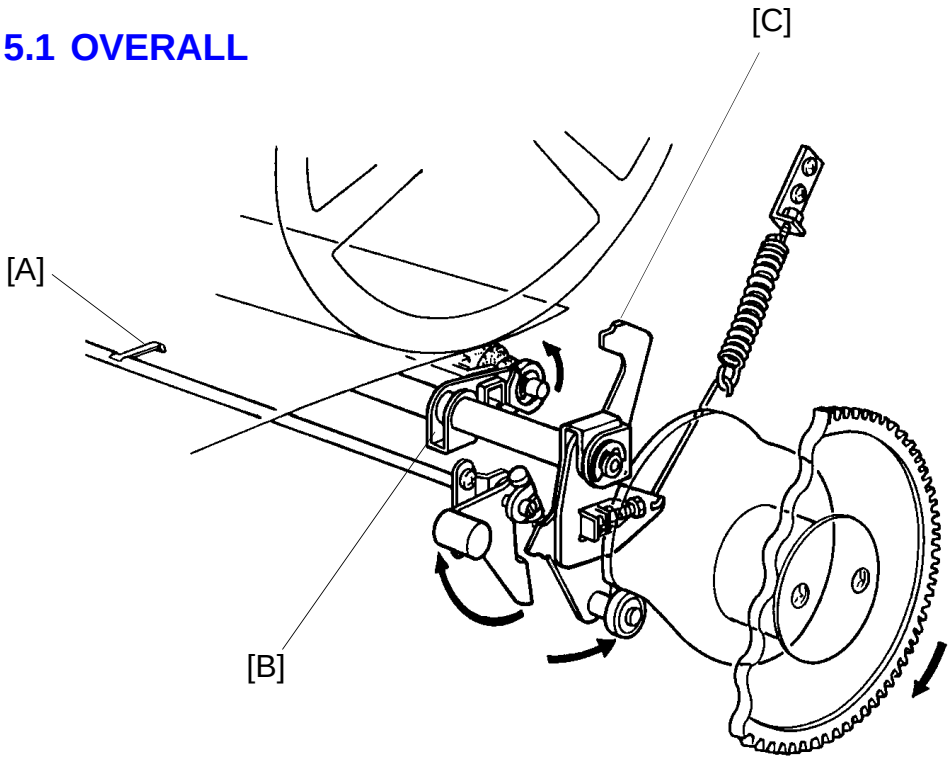

C223D538-1.img

In standby mode, the printing pressure roller is held away from the drum by two devices, a solenoid (the printing pressure solenoid), and a mechanical arm (activated by the paper detection feeler [A]).

At the start of printing, the printing pressure solenoid releases its hold on the printing mechanism at point [C], and the paper feed solenoid turns on to transfer drive from the main motor to the paper feed mechanism.

Soon after the paper has reached the second paper feed roller, the paper detection feeler [A] is pushed down by the paper, which completely releases the printing mechanism.

Printing pressure is then applied (the press roller [B] touches the drum) to transfer the ink from the master to the printer paper.

If the machine is not used for more than 8 hours, a drum stroke operation is done before the master wrapped around the drum is removed. This operation minimizes the wasted prints before the image is stabilized.

5.2 PAPER DETECTION AND PRINTING PRESSURE ON/OFF MECHANISM

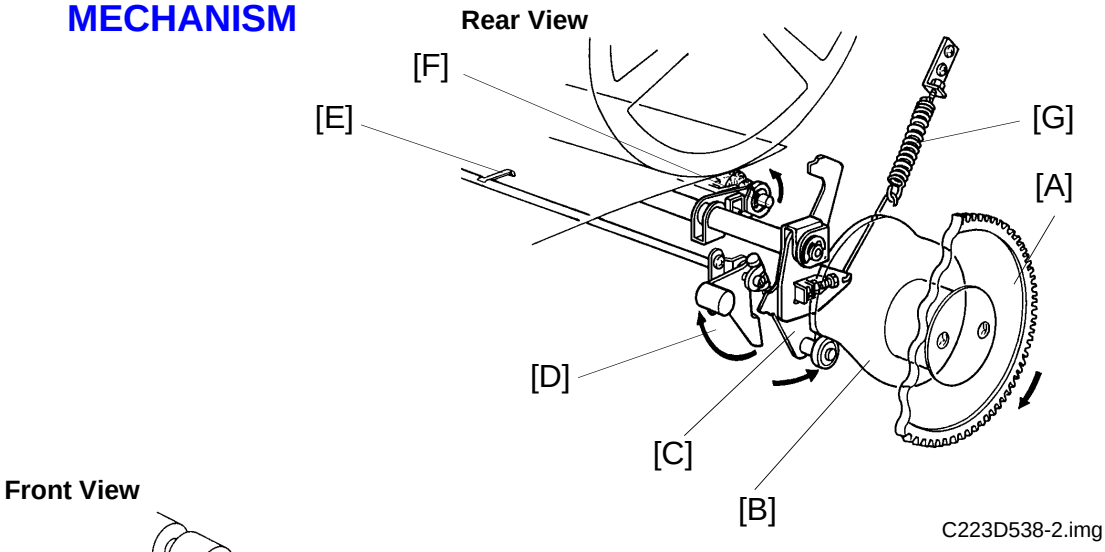

C223D538-2.img

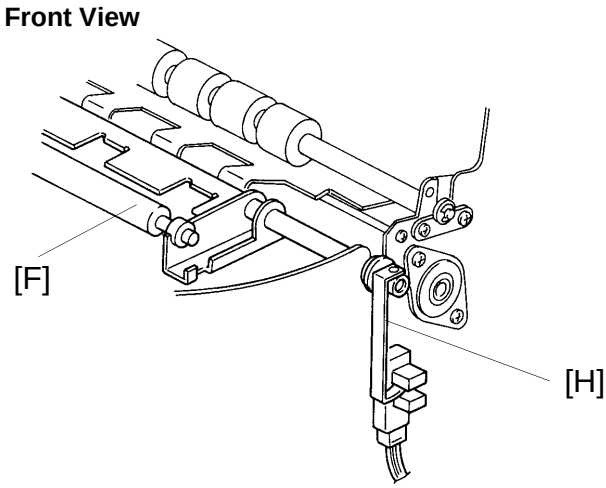

C223D540.img

During the printing process, the main motor turns the gear [A] and pressure cam [B] clockwise.

When the widest part of the pressure cam [B] reaches the bearing on the pressure on/off lever [C], the paper detection arm [D] separates from the pressure on/off lever [C]. At this moment, if paper is being fed, the paper presses down the paper detection feeler [E]. Then, the paper detection arm [D] turns clockwise to release the pressure on/off lever. As a result, the pressure on/off bearing continues moving along the pressure cam and the press roller [F] moves against the drum to apply printing pressure.

The printing pressure can be adjusted with the pressure spring [G].

The printing pressure sensor feeler [H] is away from the sensor while printing pressure is applied.

5.3 PRINTING PRESSURE RELEASE MECHANISM

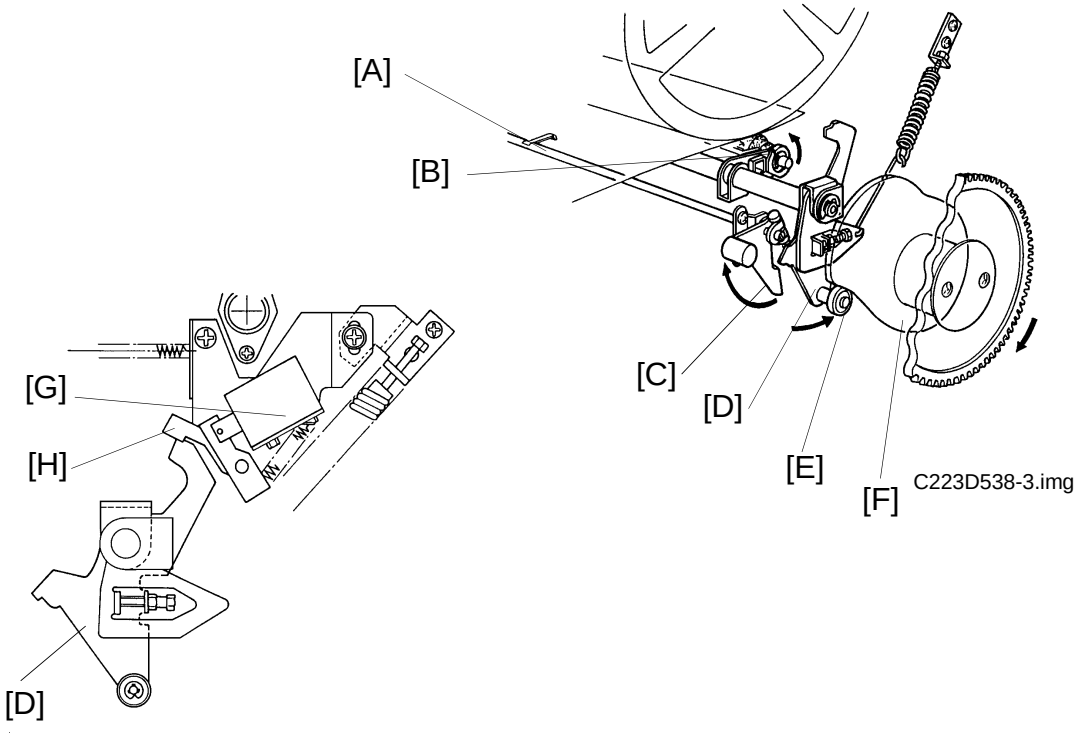

C223D539.img

During normal operation, the printing pressure solenoid [G] energizes to release the pressure on/off lever [D] at the same time as the paper feed solenoid energizes.

If a jammed sheet of paper in the printing section presses down on the paper detection feeler [A], the pressure on/off lever [D] remains disengaged from the paper detection arm [C]. Printing pressure will keep on being applied to the drum. If this printing pressure is still applied when an operator slides out the drum unit to remove the jammed sheet, the drum surface and the press roller could be damaged.

To prevent this, printing pressure is released from the drum if a paper misfeed is detected. When a misfeed is detected, the printing pressure solenoid [G] is de-energized. Then, the drum rotates to the home position. While the drum returns to the home position, the widest part of the pressure cam [F] approach the bearing [E]. This moves the pressure on/off lever [D] clockwise, then the stopper [H] engages the lever [D] (because the stopper [H] is pressed down by spring tension from the solenoid). Thus, printing pressure is released since the lever [D] is connected to the press roller [B].

5.4 QUALITY START OPERATION

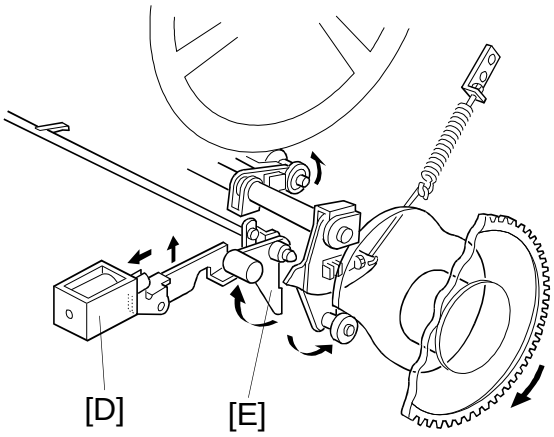

C223D557.wmf

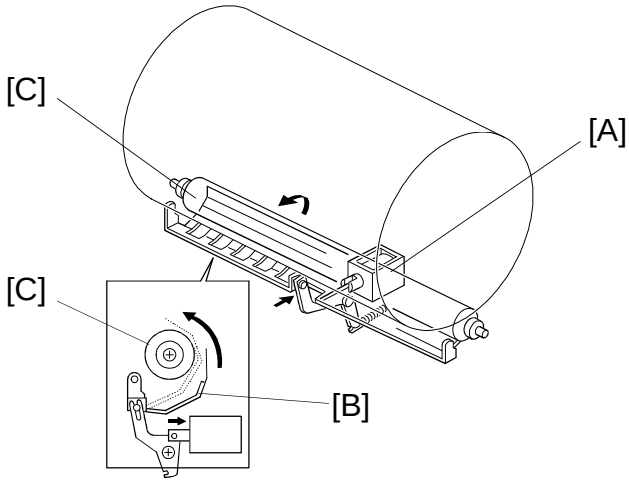

D223D558.wmf

If the main motor has been kept off for more than 6 hours, a drum stroke operation is done before the master wrapped around the drum is removed. This operation removes the dried ink with the ejected master to minimize the waste prints before the print image is stabilized.

When the master making key is pressed, the master press sheet solenoid [A] is energized. The master press sheet mylar [B] is inserted between the drum and the press roller [C]. At the same time, the detection arm release solenoid [D] is energized to release the paper detection arm [E]. Then, the main motor turns on and the press roller presses the mylar sheet to stroke the drum surface. The drum rotates twice (three times if the machine is kept off for more than 32 hours) to stroke the master around the drum. Then the master press sheet solenoid and the detection pin release solenoid are de-energized and the master eject operation starts.

There is no paper in the paper path at this time to release the paper detection arm [E] so that printing pressure can be applied to the master press sheet mylar [B], so the extra solenoid [D] was added to the mechanism.

5.5 ELECTRICAL TIMING

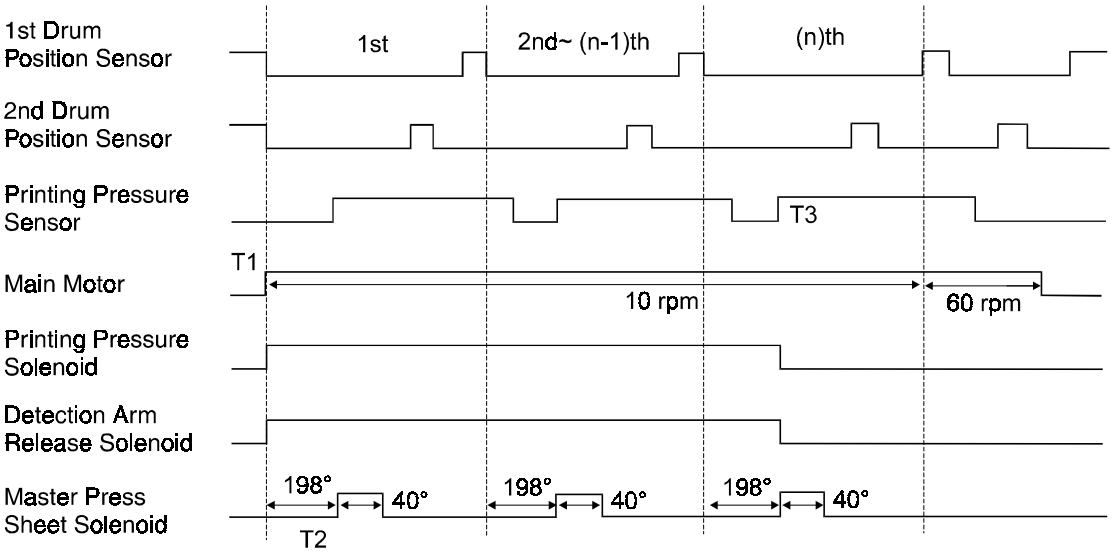

C223D556.wmf

T1: The main motor starts. At the same time, the printing pressure solenoid and the detection arm release solenoid turn on.

T2: When the drum has rotated 198 degrees from the home position, the master press sheet solenoid turns on. The solenoid turns off when the drum has rotated a further 40 degrees.

T3: When the printing pressure sensor turns on after the master press sheet solenoid has been energized (n-1) times, the printing pressure solenoid and the detection arm release solenoid turn off.

The value of "n" depends on SP79 and 80.

6. DRUM

6.1 OVERALL

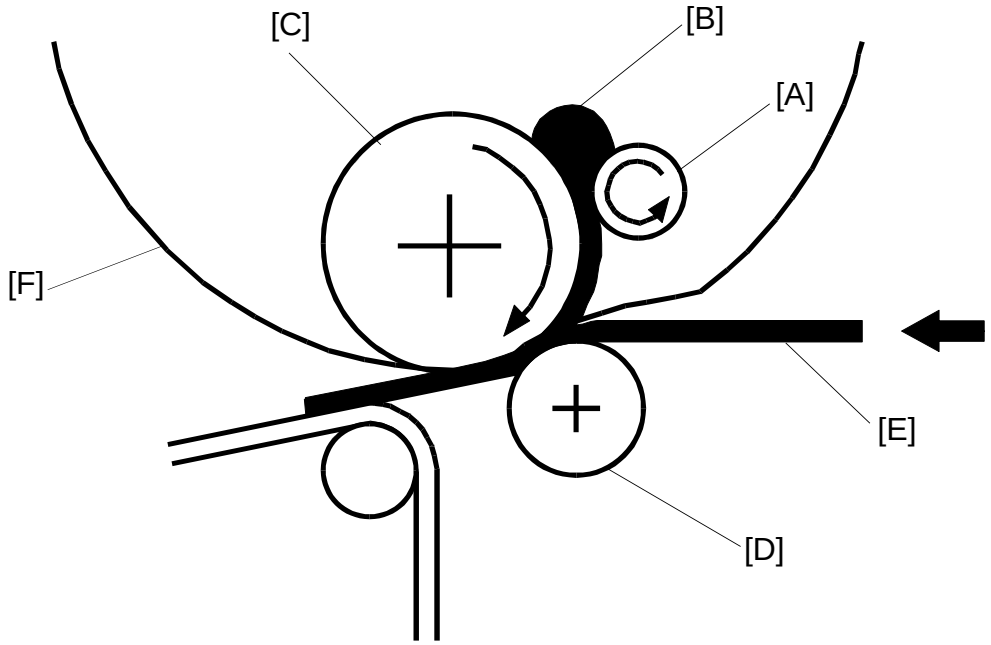

C223D541.wmf

[A]: Doctor Roller
[B]: Ink
[C]: Ink Roller
[D]: Press Roller
[E]: Paper
[F]: Drum

Ink is supplied from the ink cartridge and is applied to the ink roller uniformly. The ink is then transferred to the printing paper through the holes in the master.

6.2 DRUM ROTATION MECHANISM

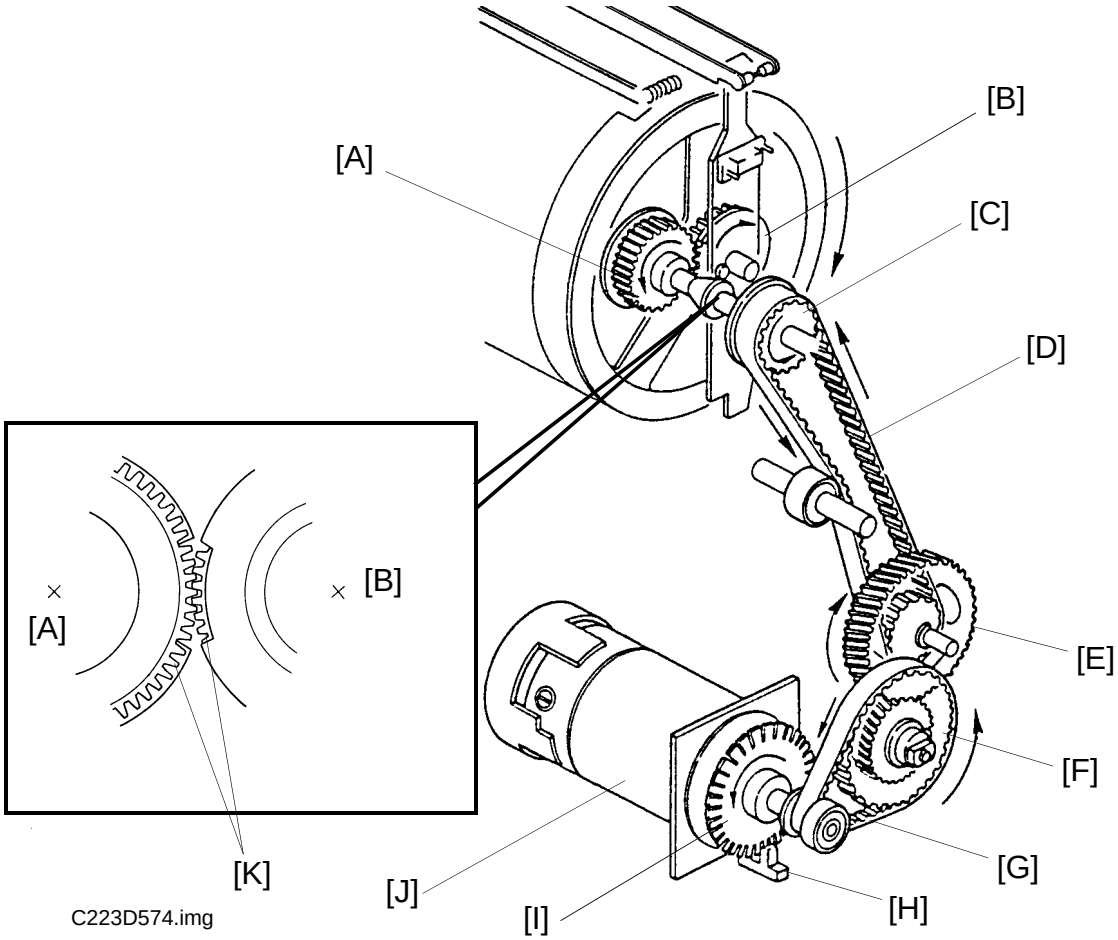

C223D574.img

C223D575.img

The main motor (a dc motor) [J], located under the rear side plate, turns the drum either clockwise or counterclockwise through belt [G], then through gears [F] and [E], then belt [D], and pulley [C]. The drive mechanism uses helical gears because they turn more quietly.

Notice gear [A], the last gear of the drive, and gear [B] at the rear end of the drum: they each have a part cut out of the flange [K]. When the drum is in the home position, the cutout parts meet, and the drum unit can be pulled out.

Pulse disk [I] and sensor [H] on the main motor shaft monitor the drum rotation speed.

6.3 DRUM LOCK MECHANISM 1

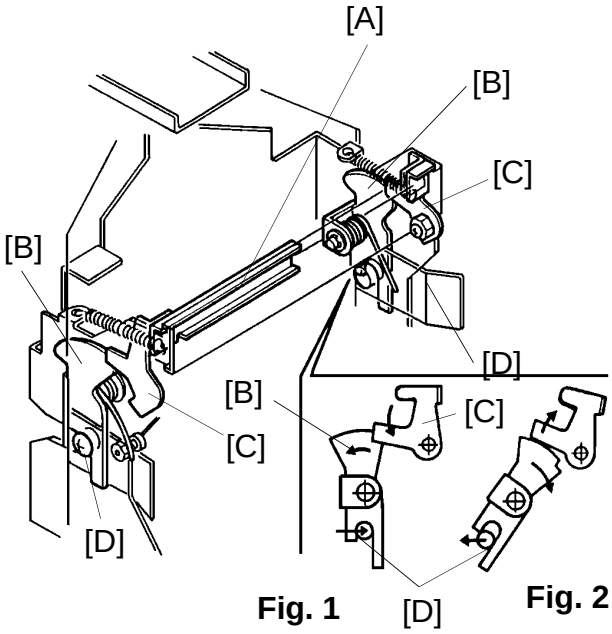

Fig. 1

Fig. 2

C223D543.img

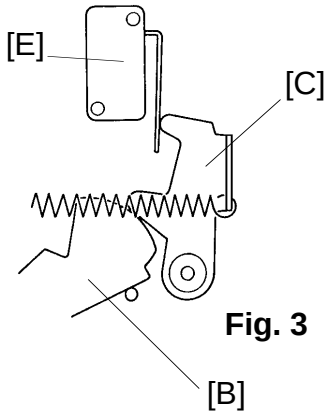

Fig. 3

C223D544.img

Detailed Descriptions

When the drum unit is placed in the machine, the arm [B] is pushed by the lock pin [D] until the top of the arm [B] is locked by the stopper [C]. This completely locks the drum unit in the machine (Fig. 1). At the same time, the top of the right stopper [C] turns on the drum detection switch [E]. The switch [E] tells the machine that the drum unit is in place (Fig. 3).

Pulling the lever [A] to the operation side turns the stopper [C] clockwise and disengages the arm [B]. Therefore, the lock pin [D] of the main body is also released from the arm [B] due to spring tension (Fig. 2).

6.4 DRUM LOCK MECHANISM 2

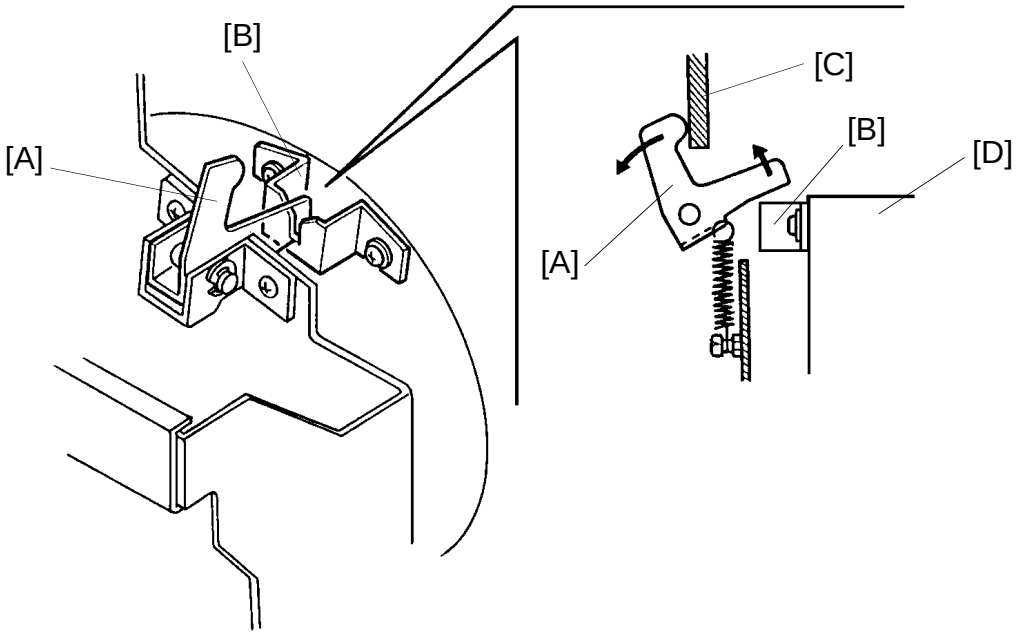

C223D545.img

To prevent the drum from rotating when the drum unit is slid out, the drum stopper [A] drops into the drum lock [B]. This secures the drum [D].

When the drum unit is put back, the front side plate of the main body [C] holds the drum stopper [A] out of the drum lock.

6.5 DRUM LOCK MECHANISM 3

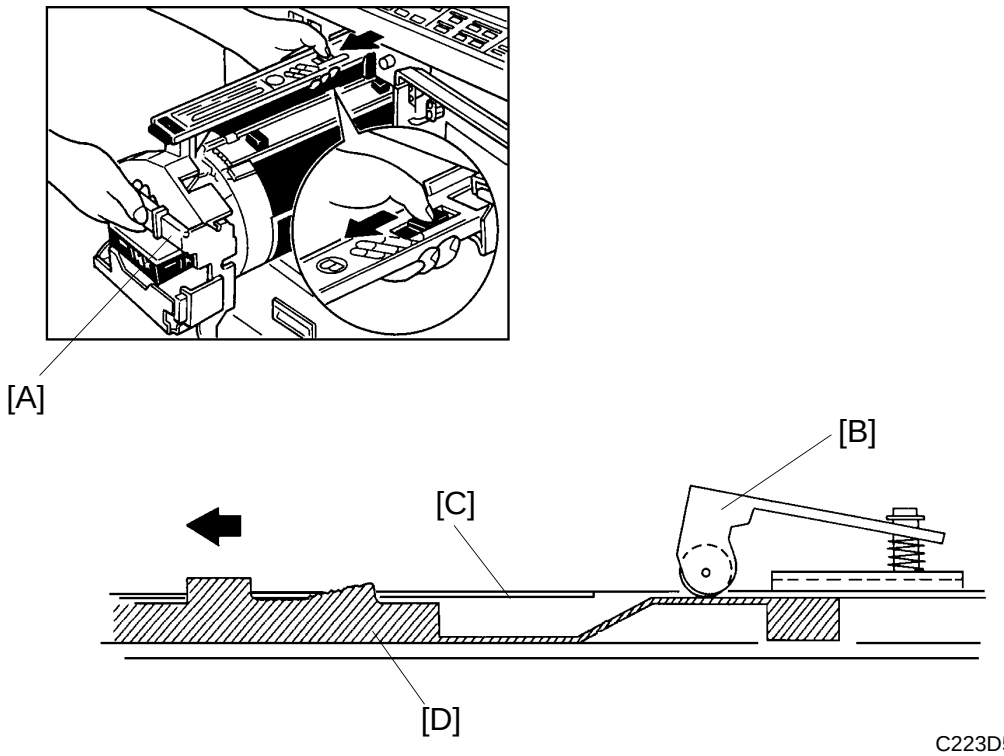

C223D546.img

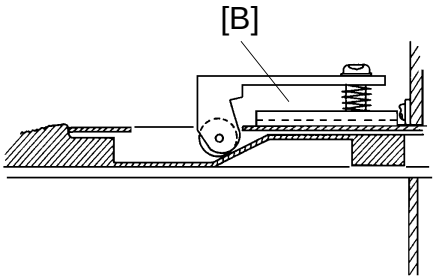

C223D547.img

When the drum is pulled out, the drum stopper [B] drops into the hole (see the above diagram). This stops the drum unit from being pulled out any further. Now, if the operator pulls handle [A], the drum unit won't fall out.

When the operator pulls stopper release [D] in the direction of the arrow, the drum stopper [B] is pushed up to the level of the drum rail cover [C]. This allows the drum to be removed.

6.6 DRUM CONNECTION MECHANISM/DRUM LOCK MECHANISM 4

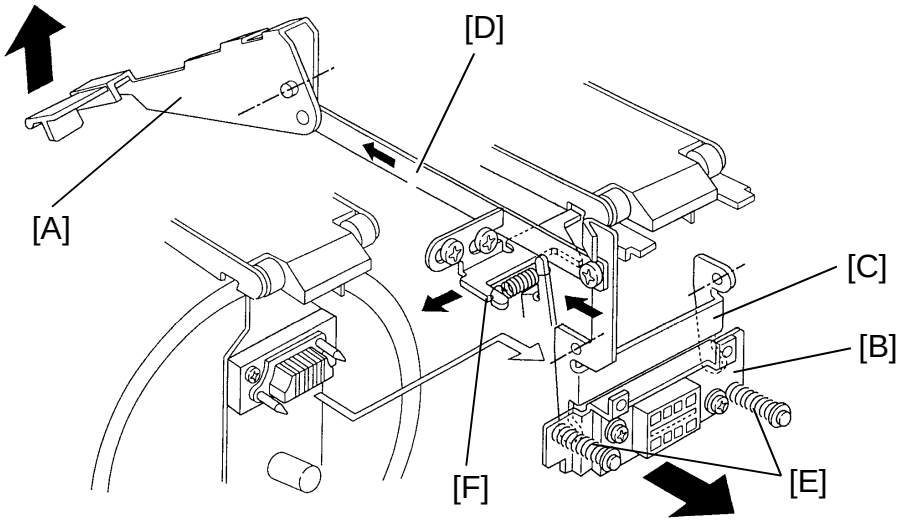

C223D548.img

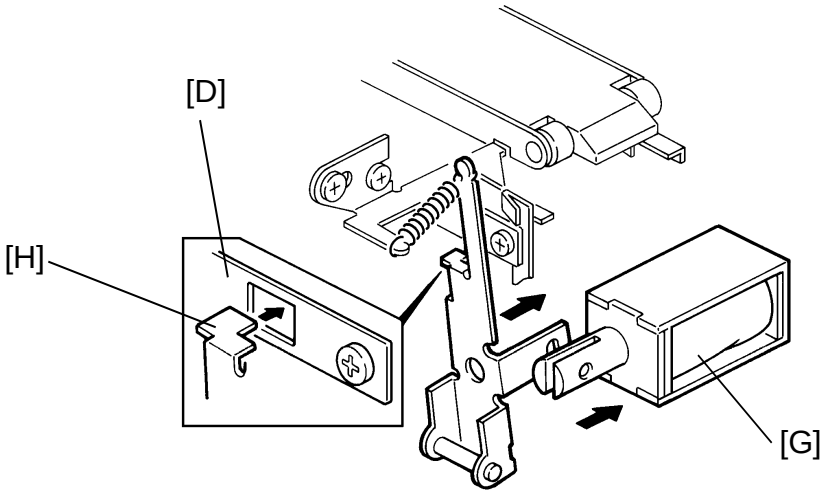

C223D549.img

When the drum release lever [A] in front of the machine is raised, the connector [B] is pushed away from the drum by the bracket [C] through the link [D], and is disconnected. The bracket [C] also pushes the drum lock lever [F] to release the drum lock allowing the drum to be removed. While the drum is away from its home position, the drum lock solenoid [G] is energized and the stopper [H] locks the link [D] to prevent the drum from being pulled out during a print cycle. The solenoid is de-energized when the drum stops at the home position (when the 1st drum position sensor is actuated).

6.7 INK SUPPLY MECHANISM

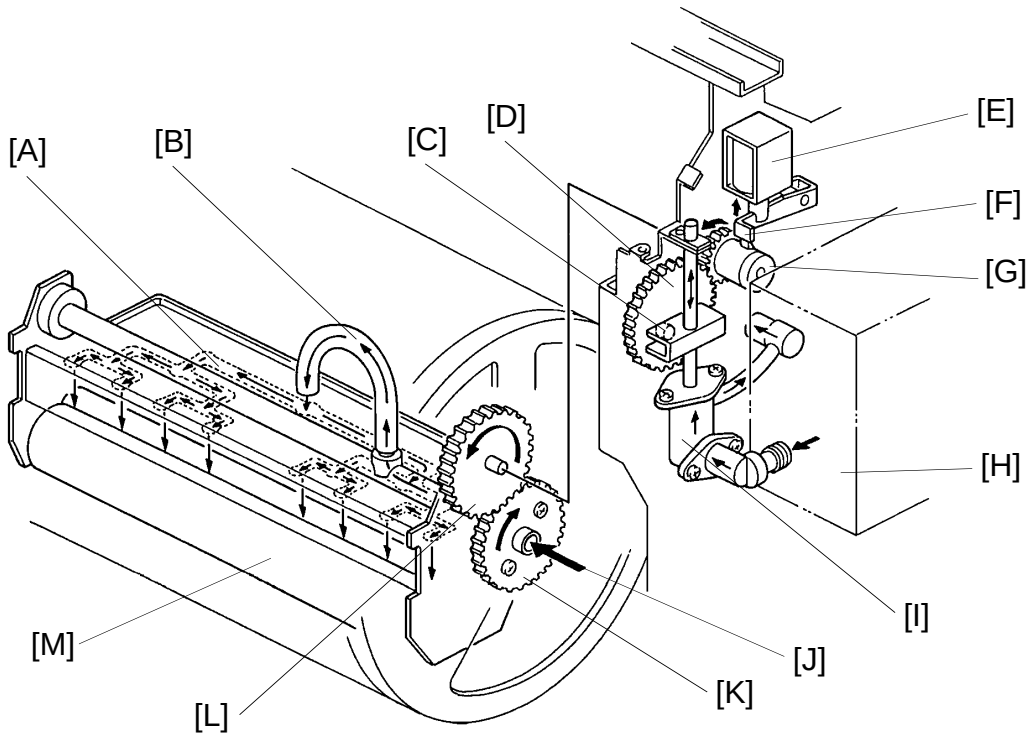

C223D550.img

Ink is supplied from the ink cartridge [H] to the ink roller [M] by the ink pump [I] and then through 8 holes in the ink distributor [A].

Drum rotation is transmitted from gear [K] to gear [L], then to the gear of the spring clutch [G]. However, the rotation is not transmitted to gear [D] because of the spring clutch [G].

When the ink detector detects less ink on the ink roller [M], the ink supply solenoid [E] turns on, and the ink supply stopper [F] releases clutch [G] allowing the gear [D] to turn.

The pin [C] moves the pump shaft up and down as the gear [D] rotates. (One stroke of the ink pump occurs for every 2 rotations of the drum.) Therefore, the ink in the ink cartridge is sucked into the pump [I]. The pump then sends the ink out into the drum shaft [J]. Then, the ink goes from the ink distributor [A] onto the ink roller [M] through the tube [B].

6.8 INK KNEADING MECHANISM

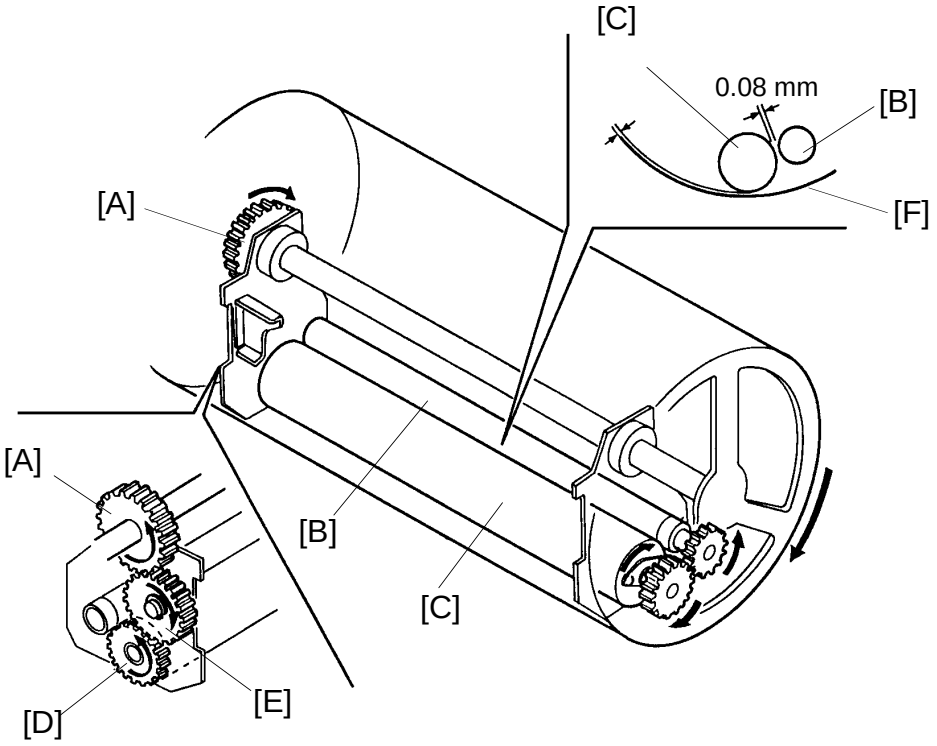

C223D551.img

The ink kneading mechanism consists of the ink roller [C] and the doctor roller [B]. The ink roller [C] rotates with the drum and the doctor roller [B] ensures that the ink goes evenly to the ink roller.

The ink roller [C] rotates with the drum this way: the drum turns a gear [A], the gear [A] turns an idle gear [E], and the idle gear [E] turns the roller gear [D]. The gear [D] is mounted on the ink roller.

The doctor roller is adjusted to give a distance of 0.08 millimeter between itself and the ink roller. It rotates to create an even thickness of ink.

The ink roller does not touch the screen [F] when the machine is not printing. However, during the printing process, the ink on the ink roller goes to the paper through holes in the screen and the master. This happens while the drum screen is held against the master by the pressure roller located under the drum.

During the master eject process, the drum rotates in the reverse direction but the ink roller does not rotate at all; the gear [D] has a one-way clutch to prevent that.

6.9 DRUM MASTER DETECTION

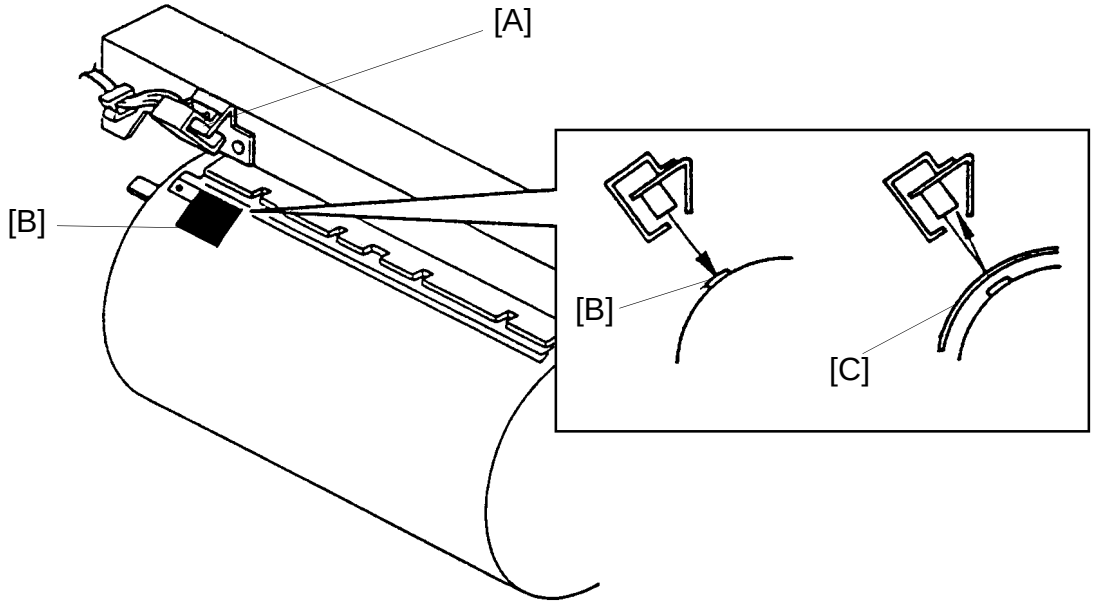

C223D552.img

The drum master sensor [A] is mounted on the drum rail and it detects whether a master is on the drum.

When there is a master on the drum, the black patch [B] is covered and the sensor detects the light reflected from the master [C]. Printing starts when the Print Start key is pressed.

When there is no master on the drum, the black seal is exposed. The black seal does not reflect light back to the sensor. The "M" indicator on the display panel blinks and printing does not start when the Print Start key or the Proof key is pressed.

C223D616.img

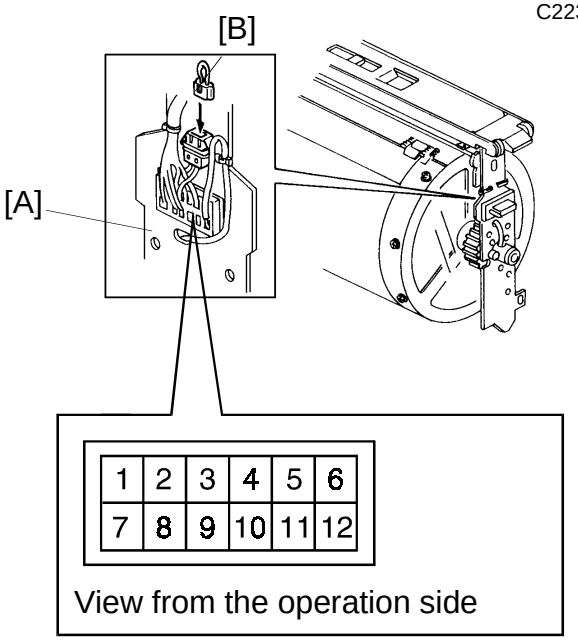

Terminal Numbers

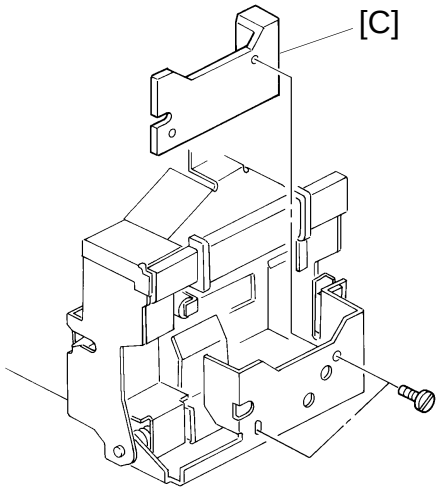

C223D618.img

The machine identifies the drum type electrically. Depending on which terminals of the drum unit connector [A] are connected, the corresponding indicator lights up on the operation panel as follows:

Drum Type	Indicator	Terminal Number			
		2	3	4	5
A3/DLT (Original)	A3 or DLT Indicator	1	0	1	0
A3/DLT (Option)	A3 or DLT and Color Indicators	1	1	1	0
A4/LT (Option)	A4 or LT Indicator	1	0	1	1

1: Connected, 0: Not connected

To use the A4/LT drum with color ink, terminals no. 2 and no. 3 should be linked using a short connector [B]. This will turn on the color indicator. The short connector is an accessory of the unit, and is included with it.

NOTE:
- To use the A4/LT drum with black ink, it is not necessary to use short connector [B].
- To use a 1000 cc black ink cartridge with the drum, the ink holder spacer [C] must be removed. The ink holder spacer is originally installed in the optional A3/DLT and A4/LT drums and is necessary only for the 600 cc ink cartridges.

6.10 INK DETECTION

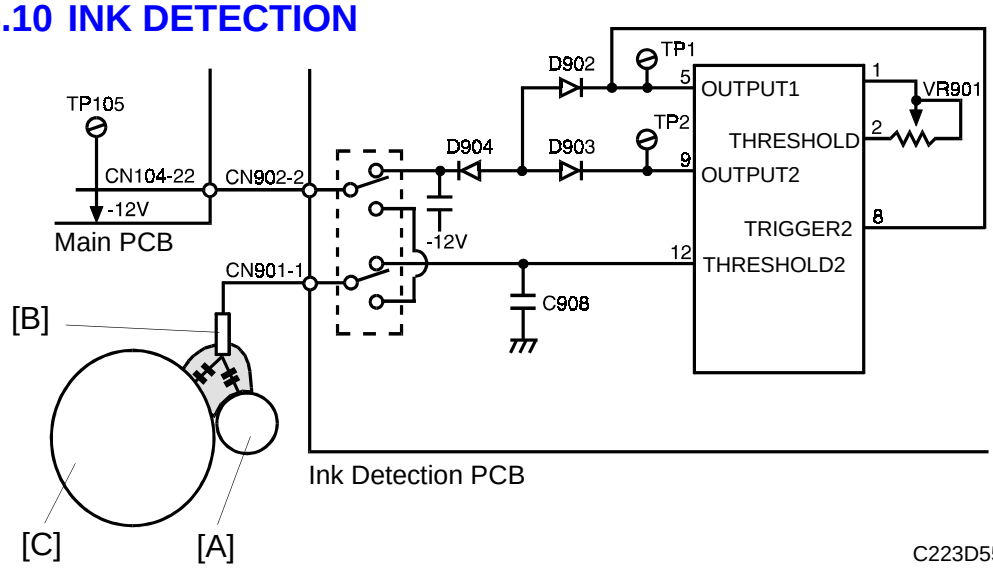

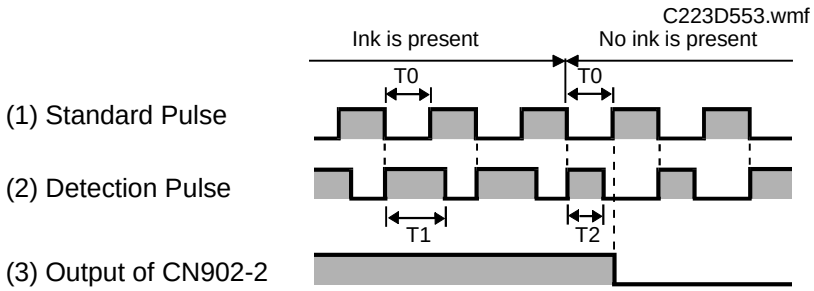

Ink Detection Circuit

C223D554.wmf

The detecting pin [B] works like the electrode of a capacitor. The capacitance between this pin and the ink roller [C] depends on the presence or absence of ink, and it affects the duty cycle of the detection pulse generated by the ink detection PCB. The detection pulse is compared to a standard pulse to detect whether there is ink in the drum or not.

(1) The standard pulse is output from OUTPUT 1. The pulse length (T_0) can be adjusted by adjusting VR901.

(2) OUTPUT 2 is the detection pulse. The duty cycle is determined by C908 and the electrostatic capacity between the detection pin and the ink roller [C] or doctor roller [A] (ground). The detection pulse is triggered by the falling edge of the standard pulse that is input from TRIGGER 2.
When ink is present, the electrostatic capacity increases and the pulse length (T_1) becomes longer. On the other hand, when ink is not present, the pulse length (T_2) becomes shorter as the electrostatic capacity decreases.

(3) The pulse length (T_1 or T_2) is compared with the standard pulse (T_0). When the pulse length is shorter than the standard pulse (T_0), the output of CN902-2 goes low, indicating that there is no ink.

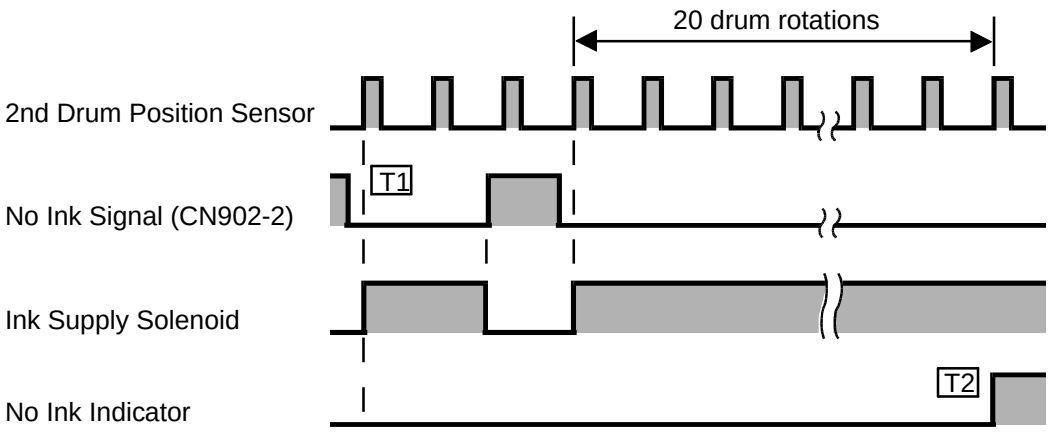

C223D555.wmf

Ink Detection Timing

T1: When there is no ink left on the ink roller and the no ink signal (output of CN902-2) is low (indicating that there is no ink), the ink supply solenoid turns on at the next rising edge of the second drum position sensor signal. The ink supply solenoid turns off when CN902-2 goes high.

T2: If the no ink signal remains low when the drum has made 20 rotations since the ink supply solenoid turned on, the No Ink indicator blinks.

When this happens and when the "Reset" key is pressed, the drum turns 40 times to supply ink; this is the user’s procedure for supplying new ink. (When the "0" key is pressed while pressing the "Reset" key, the drum turns 40 times even when the No Ink indicator is not blinking: this is a technician’s test procedure.)

When the No Ink Signal goes high during the 40 drum rotations, the indicator goes off and the ink supply solenoid is de-energized.

7. DELIVERY

7.1 OVERALL

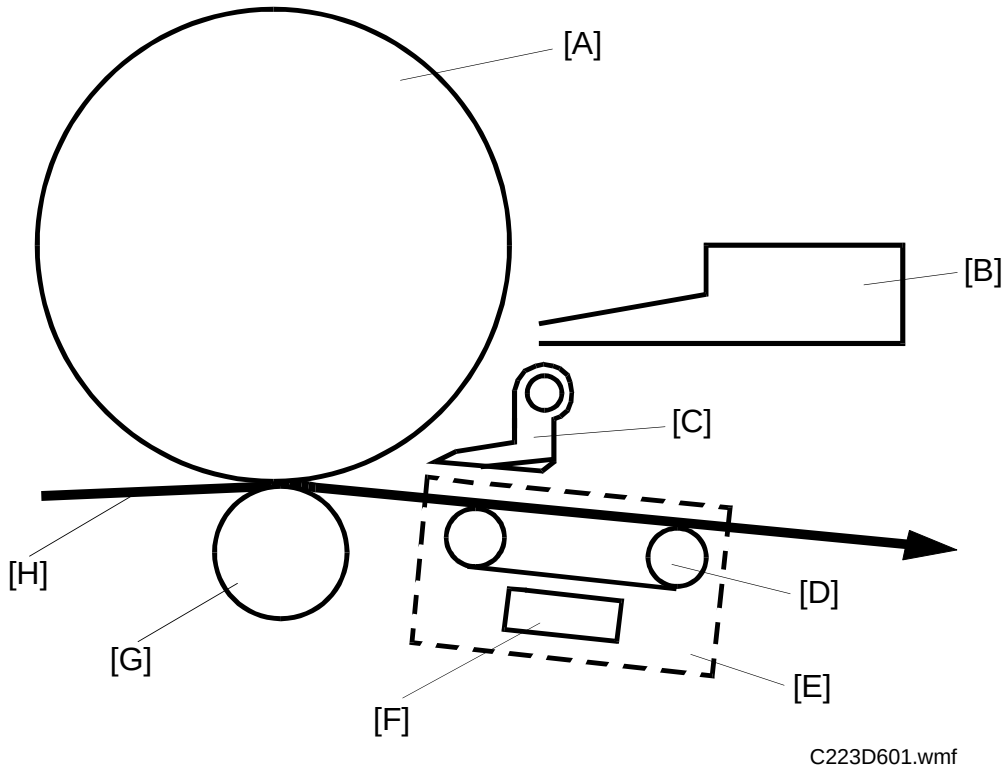

[D]: Belt
[F]: Vacuum Fan
[G]: Press Roller
[H]: Paper

The exit pawl [C] and the air knife [B] separate the paper from the drum [A] and the vacuum fan [F] in the transport unit [E] pulls the paper against the belt [D] as the belt moves the paper to the delivery table.

7.2 EXIT PAWL DRIVE MECHANISM

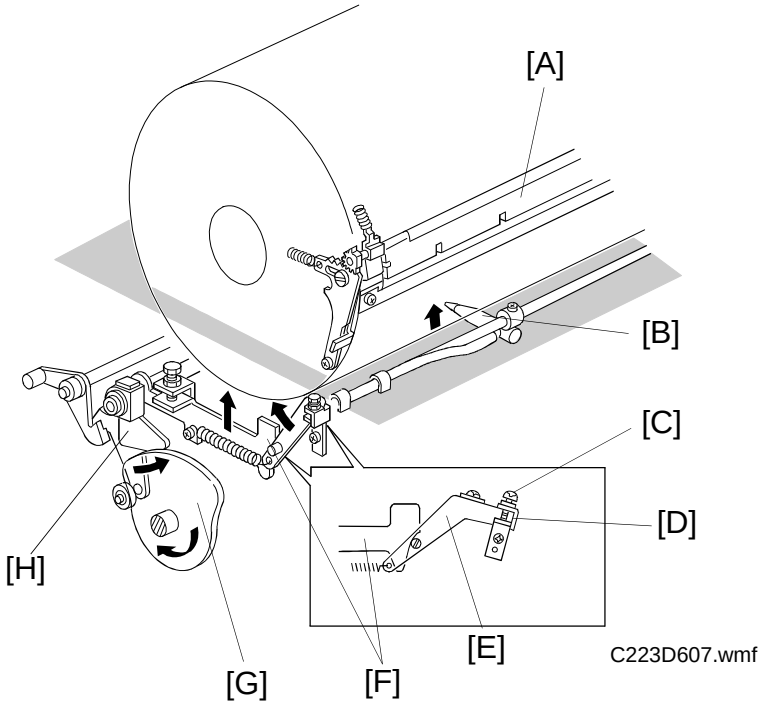

The exit pawl [B], located in the center of the drum, guides the center of the printing paper. As the master clamper [A] approaches the exit pawl, the exit pawl moves away from the drum.

When printing pressure is applied to the drum, the narrowest part of the pressure cam [G] comes to the bearing on the pressure on/off lever [H], and the lever [H] turns counterclockwise. The exit pawl drive cam [F] is connected to the pressure on/off lever [H] and so the cam [F] moves up. The exit pawl lever [E] then turns clockwise as it moves along the surface of the exit pawl drive cam [F]. Therefore, the exit pawl also comes near the drum until the stopper [D] contacts the adjusting screw [C]. This keeps a small clearance between the exit pawl and the drum surface to ensure the printing paper will be fed to the vacuum unit.

As the press roller moves away from the drum (the widest part of the cam [G] comes to the bearing on the pressure on/off lever [H]), the exit pawl drive cam [F] moves down and the exit pawl lever [E] turns counterclockwise. This causes the exit pawl [B] to separate from the drum.

The exit pawl [B] is held away from the drum when printing pressure is not applied.

7.3 VACUUM UNIT DRIVE MECHANISM

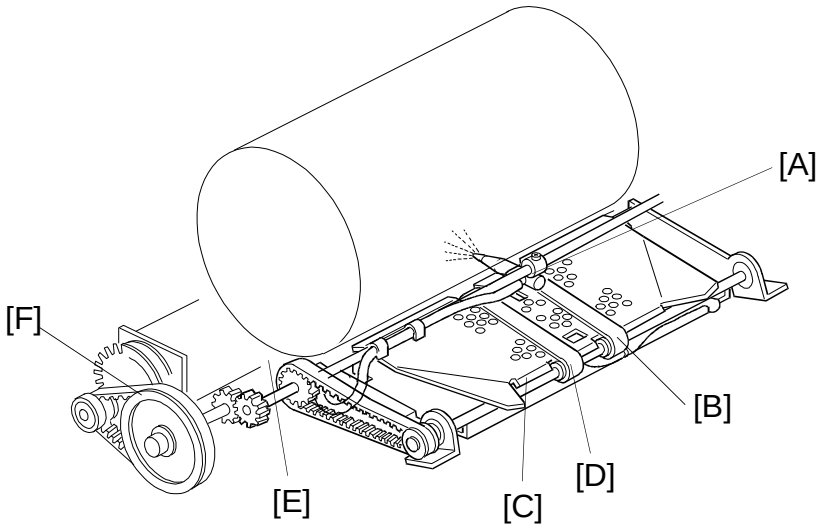

C223D608.wmf

The vacuum fan (below the transport belts) holds the paper against the transport belts [D]. The transport belts move the paper to the delivery table.

Wing guides [C] at each end of the vacuum unit help keep the back side of the printing paper clean.

When the main motor turns on, the gear [F] mounted on the main motor shaft drives a drive shaft [E] through gears and belts. This drive shaft turns the transport belts.

The first and second paper exit sensors [A] and [B] check for paper jams.

The paper exit jam check is done when printing pressure is applied and the printing pressure sensor is interrupted.

Jam Condition	Sensor Status
Delivery Misfeed	The 2nd paper exit sensor is still on when the 2nd drum position sensor turns on.
Paper Wrap	The 1st paper exit sensor fails to turn on even though the drum has rotated 20° after activating the 2nd drum position sensor.
Paper Wrap	The 2nd paper exit sensor fails to turn on even though the drum has rotated 25° after activating the 1st drum position sensor.

7.4 EXIT PAWL AIR PUMP MECHANISM

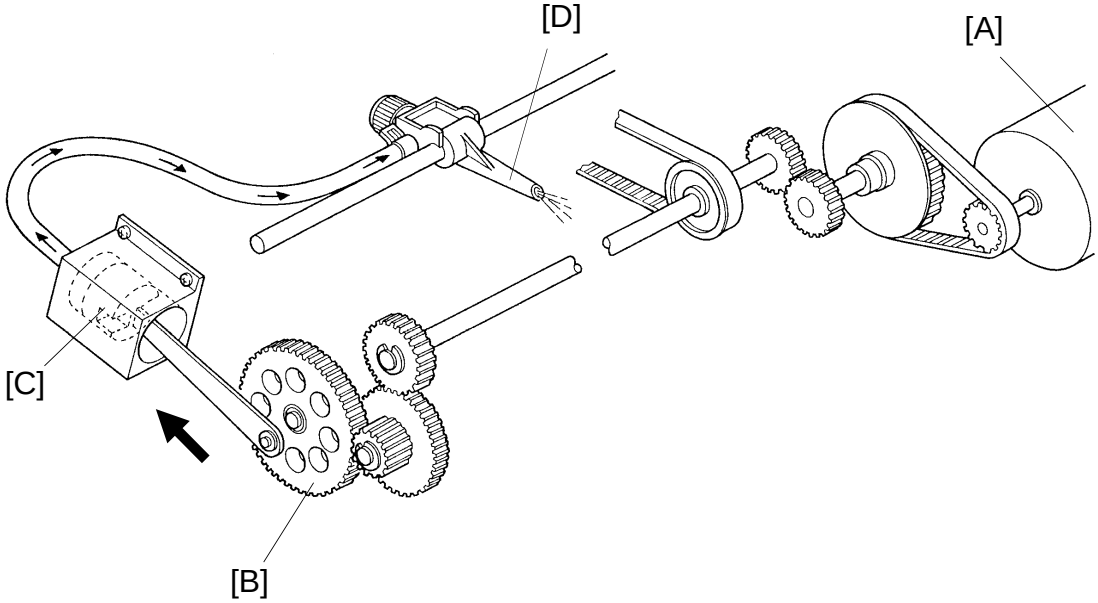

C223D609.img

The main motor [A] turns a gear [B] through idle gears, a belt and a shaft. The gear [B] rotates and drives the piston [C] back and forth.

The piston moves forward and pushes a jet of air out through the nozzle [D]. This jet of air helps push down on the paper and separates it from the drum.

7.5 WING GUIDE MECHANISM

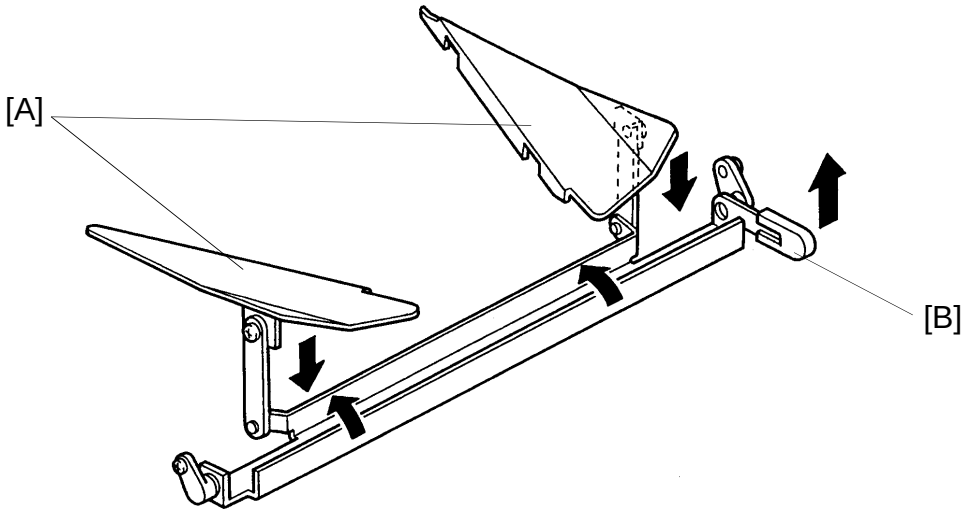

C223D620.img

The wing guide [A] lifts up the sides of the paper as it exits the machine.

This stiffens the paper so that the leading edge of thin paper will not sag and brush against the sheets on the delivery table. This prevents the ink on freshly printed sheets from being smeared.

The angle of the wing guide can be changed by moving the guide release lever [B]. Usually, the wing guide release lever is set to the lower position to raise the wings. If printed pages do not stack evenly or if the pages pass over the end fence, raise the lever to the upper position to release the wings.

7.6 PAPER DELIVERY TABLE

7.6.1 Master Eject Unit Lock Mechanism

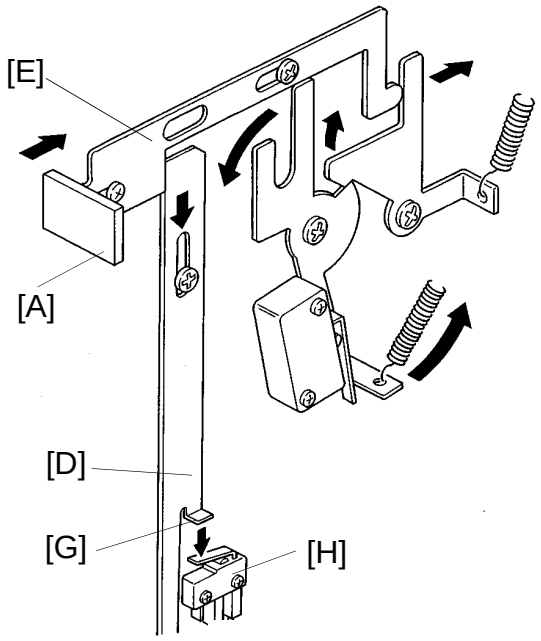

C223D578.img

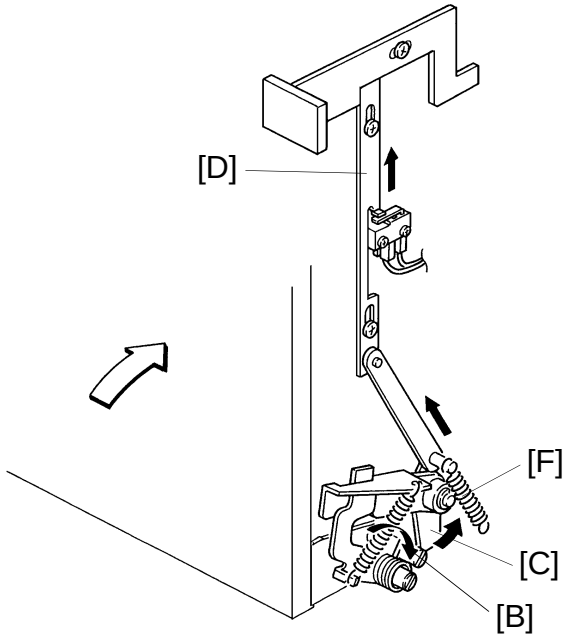

C223D559.img

The master eject open button [A] locks when the paper delivery table is closed. This prevents the paper delivery table from opening suddenly when the user presses the master eject open button.

This lock mechanism functions as follows:

- As the paper delivery table is closed, the pin [B] located on the front of the paper delivery table pushes down on lever [C] which raises arm [D]. When arm [D] is in the upper position, lever [E] cannot move forward.
- When the delivery table is opened, arm [D] is pulled down by the tension spring [F] and lever [E] can move forward.
- The projection [G] on arm [D] contacts the delivery table open switch [H], which sends a signal to inform the main PCB that the delivery table is open.

7.6.2 Paper Delivery Table Angle

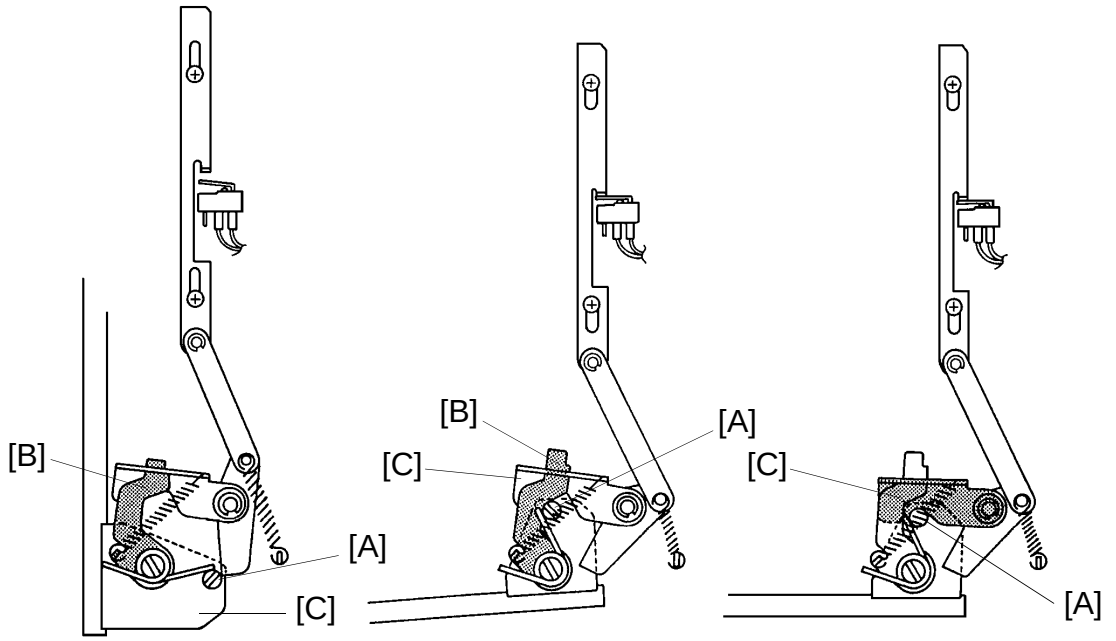

Fig. 1: Closed Fig. 2: 10° slant Fig. 3: Level

C223D560.img

There are two paper delivery table open positions.

As the paper delivery table is lowered from the closed position (fig. 1), the pin [A] fixed to the table side frame moves forward and pushes the stopper [B] forward. This disengages the lever [C] from the stopper (fig. 2) with a audible click and the table stops at a 10° downward slant when the pin reaches the end of the slot cut in the side frame.

When the delivery table is slightly raised up from the 10° downward slant position, spring tension pulls the lever downward and the pin engages the lever. This stops the table at the level position.

Normally, the table should be at a 10° downward slant. This prevents the leading edge of each sheet from rubbing against the other sheets on the table as the sheet is fed out, and ensures that the leading edge of the sheet being fed out will not smear the ink on the top printout that is on the paper delivery table. However, small sheets of paper sheets may pass over the end fence if the table is at the 10° downward slant position. If this happens, the user should raise the table to the level position.

7.7 ELECTRICAL TIMING

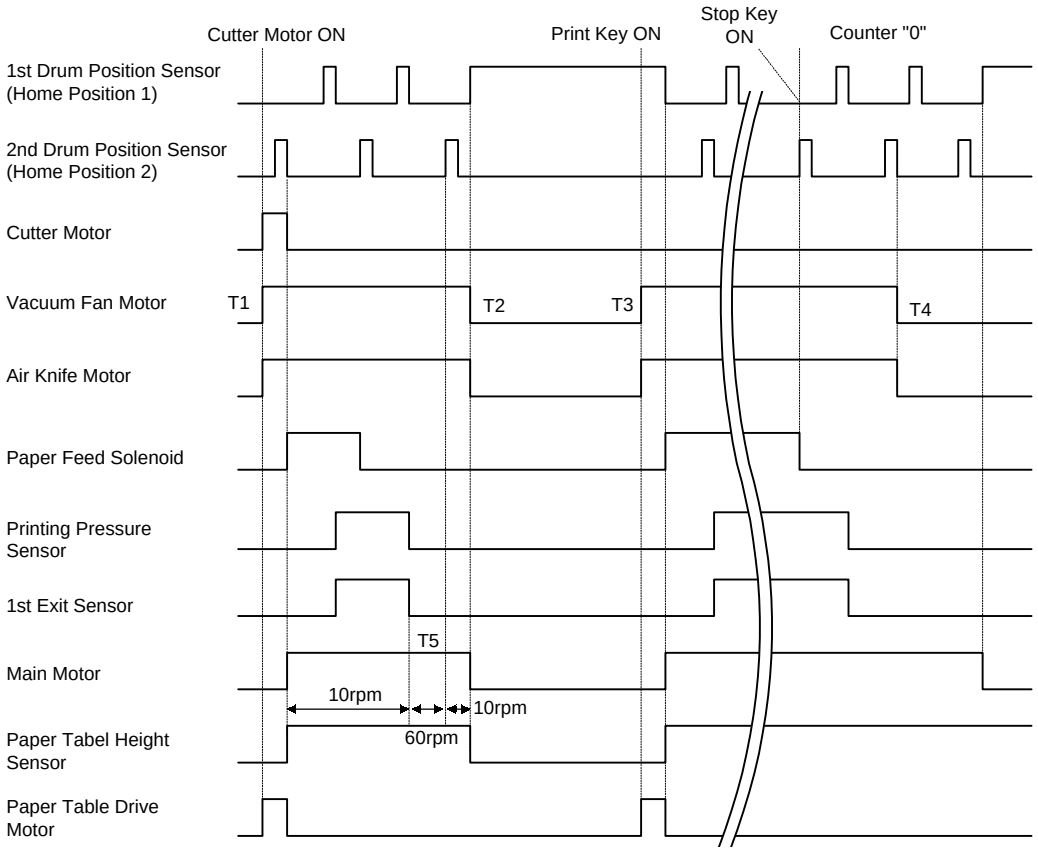

C223D561.wmf

T1: The cutter motor, vacuum fan motor, air knife motor, and main motor turn on.

T2: The vacuum fan motor and the air knife motor turn off the next time the 2nd drum position sensor is deactivated after the printing pressure sensor turns off.

T3: When the Print Start key is pressed, the vacuum fan motor and the air knife motor turn on when the paper table height sensor is activated.

T4: When the counter indicates "0" and the 2nd drum position sensor is activated, the vacuum fan motor and air knife motor turn off.

T5: When the 1st exit sensor and the printing pressure sensor turn off, the main motor speed increases to 60 rpm to ensure paper delivery to the exit table.

8. IMAGE POSITIONING

8.1 OVERALL

In image positioning mode, the image can be shifted 20 mm (5 mm steps) up and –15 mm down on the page by pressing the forward or backward Image Position key on the operation panel. This rotates the first and second paper feed roller cam a small distance to change the paper feed timing in relation to the drum rotation timing.

8.2 IMAGE POSITIONING MECHANISM

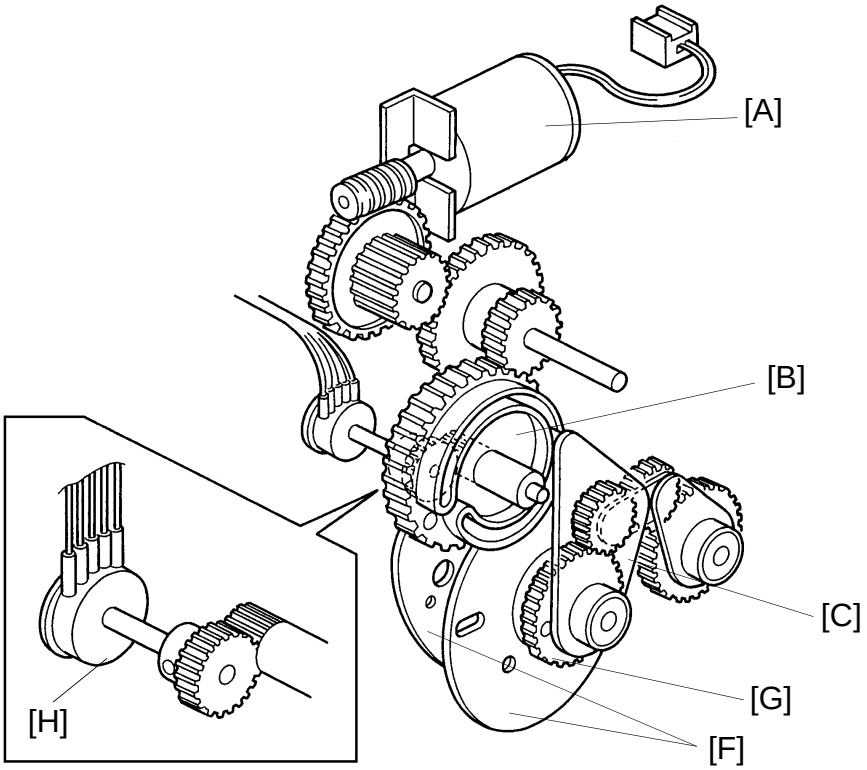

C223D562.img

Continued on the next page

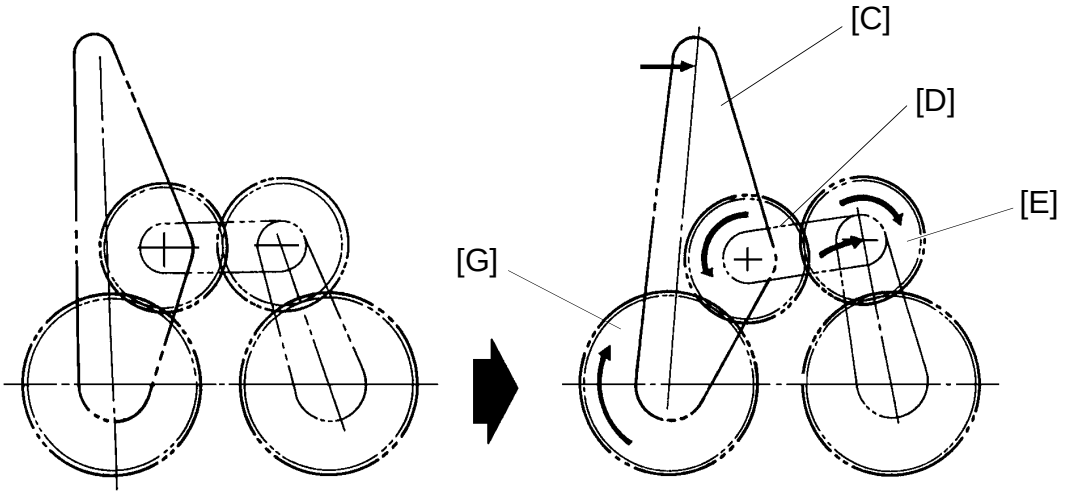

C223D563.img

When the forward Image Position key on the operation panel is pressed, the image positioning motor [A] turns and drives cam gear [B] clockwise a short way through gears.

The cam gear has a spiral track along which the lever [C] moves. When the cam gear turns clockwise a short way, the pin on the lever [C] moves towards the outside of the cam gear and the lever turns clockwise a short way.

The lever [C] drives gear [E] clockwise a short way through gear [D] and the first paper feed roller and the second paper feed roller cams [F] mounted of the shaft on gear [G] turn clockwise a short distance.

As a result, the paper feed start timing is delayed in relation to the drum rotation timing and the image position is moved in the forward direction. (Refer to the Paper Feed section for details on the cam mechanism.)

The image position is detected by the image position sensor [H] which is located behind the cam gear [B].

8.3 CIRCUIT

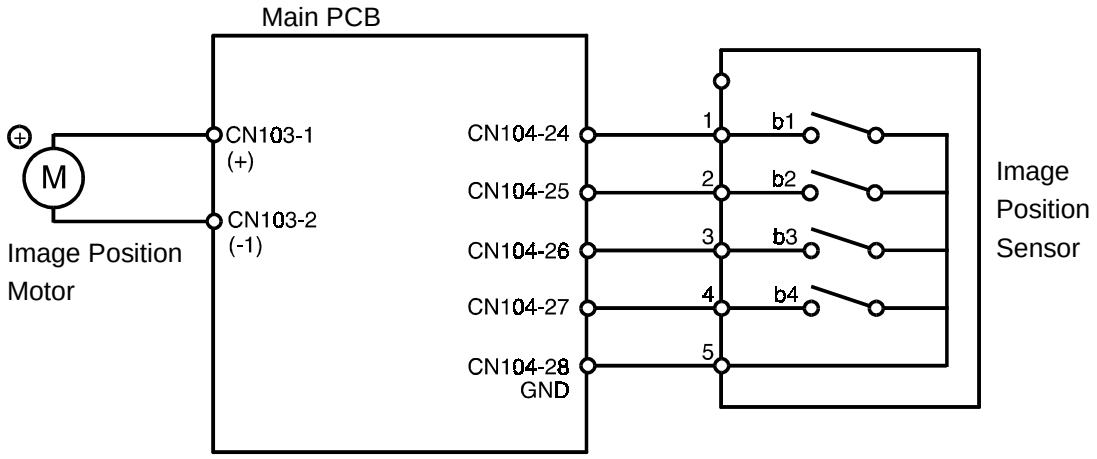

C223D564.wmf

When the forward Image Position key is pressed, CN103-2 goes to 22 V and CN103-1 goes to 0 V, and the image positioning motor turns to advance the paper feed timing.

When the backward Image Position key is pressed, CN103-1 goes to 22 V and CN103-2 goes to 0 V, and the image positioning motor turns to move back the paper feed timing.

The main PCB detects the image position by means of a four-bit signal received from the image position sensor. The image positioning motor turns off when the image is at the selected position.

Nine different image position settings can be selected by pressing the Image Position key.

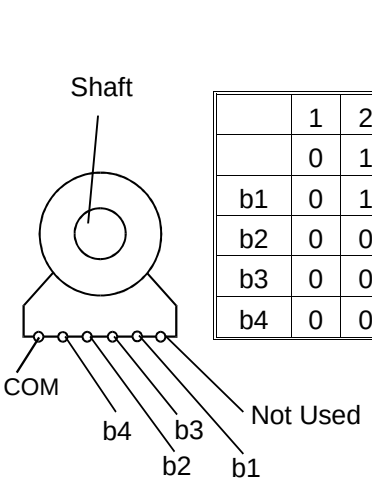

Image Position Area

(+) 0 (+)

	1	2	3	4	5	6	7	8	9	10	11	12	13	14	15	16
	0	1	3	2	6	7	5	4	C	D	F	E	A	B	9	8
b1	0	1	1	0	0	1	1	0	0	1	1	0	0	1	1	0
b2	0	0	1	1	1	1	0	0	0	0	1	1	1	1	0	0
b3	0	0	0	0	1	1	1	1	1	1	1	1	0	0	0	0
b4	0	0	0	0	0	0	0	0	1	1	1	1	1	1	1	0

1 = Switch is on
0 = Switch is off

C223D600.wmf

9. IMAGE PROCESSING

9.1 OVERVIEW

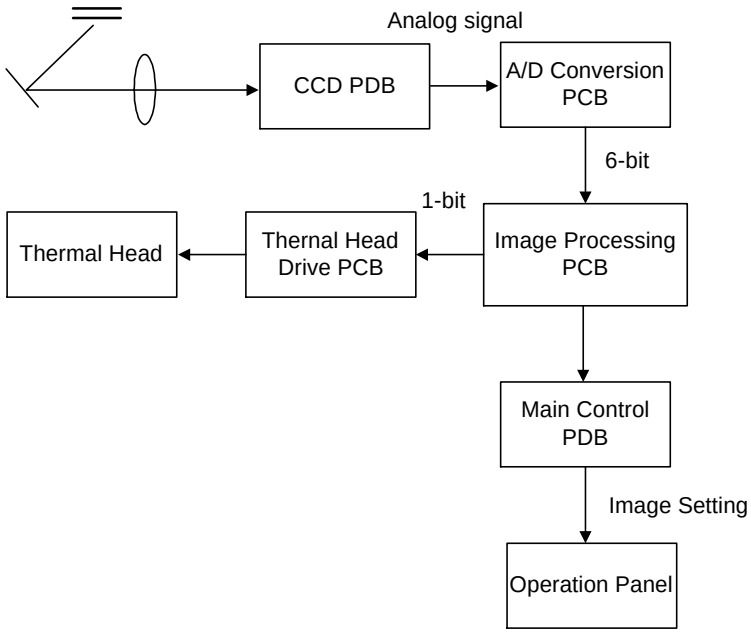

C223D579.wmf

The light reflected from the original goes to the CCD, which converts the light signal into an analog electrical signal. The analog signal is sent to the A/D conversion PCB, where it is changed to 6-bit digital data. The 6-bit data is changed to 1-bit data in the image processing PCB and the image processing PCB drives the thermal head through the thermal head drive PCB to make an image on the master with the 1-bit data.

The 6-bit to 1-bit conversion procedure depends on the image settings on the operation panel.

9.2 CCD (CHARGE COUPLED DEVICE)

The light reflected from the original reaches the CCD (Charge Coupled Device). The CCD reads one complete scan line at a time.

The basic circuit of each CCD element is shown below. The light reflected from the original is detected by a photodiode. A capacitor stores the resulting electrical charge, which depends on the light intensity. The CCD used in this model has 5416 sets of such photodiodes and capacitors in series. The electrical charges from the CCD elements are sent to the A/D conversion PCB one after the other (this is the OS signal). To increase the scanning speed, the odd and even pixel data are handled separately.
The CCD consists of 5416 elements. The first 64 elements are dummy elements which are not used for image data. The following 5340 pixels are effective elements. All the data for one scan line across the original image are converted into electrical charges and stored in the capacitors of these elements. After the effective elements, there are 12 more dummy elements.

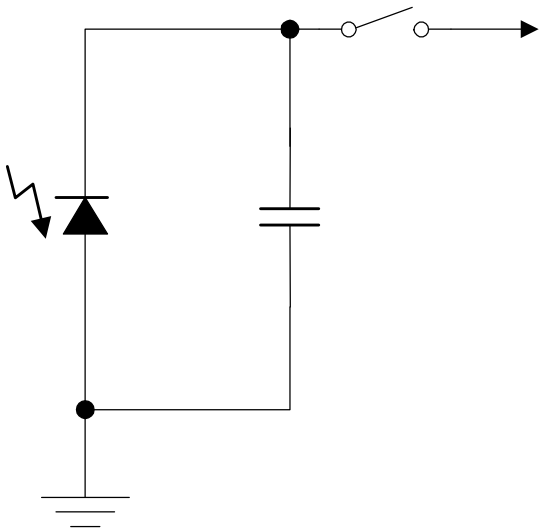

C223D580.wmf

9.3 A/D CONVERSION

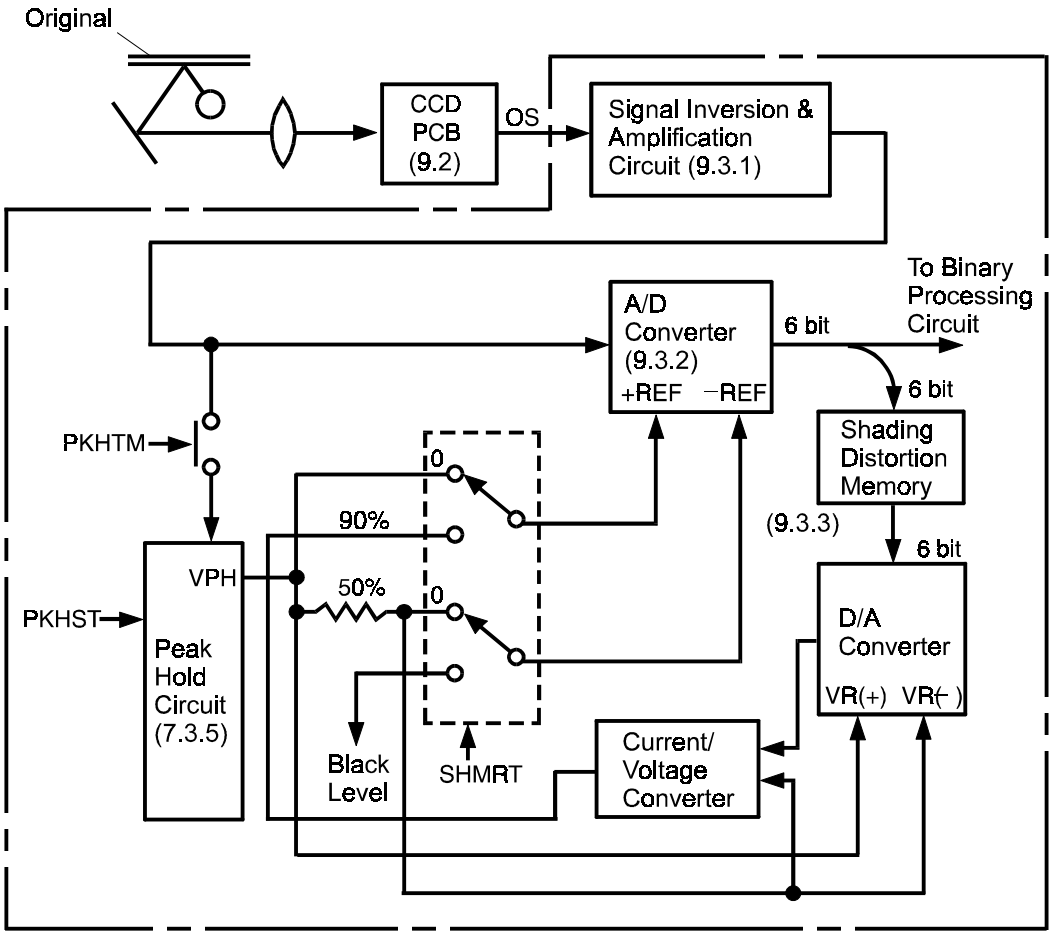

C223D581.wmf

The analog signal generated from the CCD is inverted and amplified in the A/D conversion PCB. The analog signal is converted into 6-bit digital data which is sent to the image processing PCB. The original background and the distortion of the light path are monitored to obtain accurate image data.

9.3.1 Inversion and Amplification

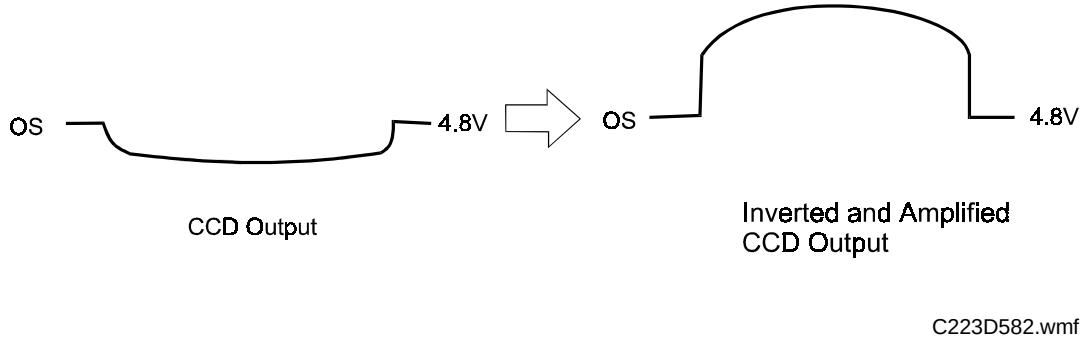

C223D582.wmf

The analog signal (OS) from the CCD is output to the A/D conversion PCB. It is sent as a negative signal in relation to the dc bias voltage (which is approximately 4.8 V). In the A/D conversion PCB, the negative signal is inverted and amplified before being converted to digital.

The amplification ratio can be changed using VR601 on the A/D conversion PCB.

9.3.2 A/D Converter

The inverted and amplified CCD output is sent to the A/D converter. The A/D converter can produce 64 gray scale steps. To make the 64 steps, the difference in voltage between the high reference voltage (+REF) and the low reference voltage (-REF) is divided into 64. The amplified CCD output voltage is digitized based on these steps. If the amplified CCD output voltage is higher (the image pixel is lighter), a higher value is the result.
The digitized image data are sent serially to the main control PCB.

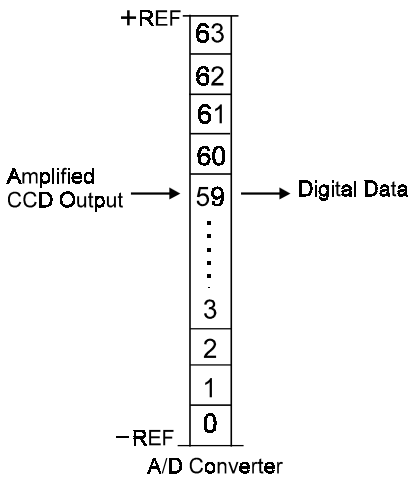

C223D583.wmf

9.3.3 Shading Distortion Correction

The image data from one main scan line sent from the CCD does not exactly represent the line from the original image, because of the following reasons:

1) Loss of brightness towards the ends of the exposure lamp and the edges of the lens.

2) Variations in sensitivity among elements of the CCD

3) Distortions of the light path

Such distortions in the image data are corrected when they are converted into digital data.

Before scanning the document, the scanner reads the white plate on the back of the original scale. The output of each CCD element is changed to a 6-bit digital value and stored in the shading distortion memory.

To change the analog shading distortion signals to digital data, a scale of 64 steps is made between the whitest level when the white plate is scanned and 50% of the whitest level. Using this scale, the analog signal is changed to 6-bit digital data.

While an original is scanned, the 6-bit shading distortion value for each pixel is serially sent from memory to the D/A converter, synchronizing with the image signal being sent to the A/D converter. The D/A converter changes the distortion value to electrical current. The current is converted to the voltage to be used as high reference data for A/D conversion. In this way, the high reference voltage for A/D conversion is changed serially for each pixel depending on the shading distortion data for that pixel.

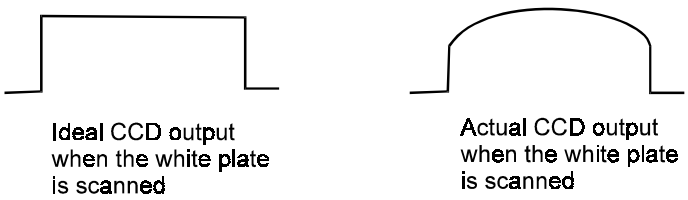

C223D584.wmf

9.3.4 Original Background Correction

When an original is scanned, the whitest level of the original background is stored, and that level is used as the white peak level for A/D conversion. The gray scale is made based on the white peak level of the original. As a result, dark background does not appear on the printout.

In the normal setting, the original background correction is done for Line mode only. In Photo mode or Line/Photo mode, the whitest level when the white plate is scanned is used for the high reference voltage. If "Yes" is selected in SP29, the background correction is also done for Photo and Line/Photo modes.

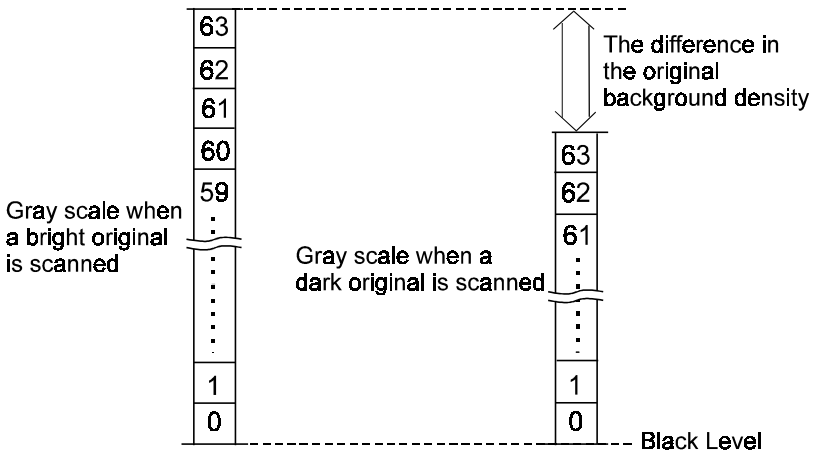

C223D585.wmf

9.3.5 Peak Hold

The peak hold circuit holds the voltage for the white peak level. Before scanning an original, it holds the white peak voltage from the white plate to make shading distortion data. When the original is scanned, it stores the white peak level of the original for the original background correction.

9.3.6 Black Level

The black level circuit always outputs a constant voltage which is used as the low reference value for A/D conversion. The black level is adjustable, and it should be the same as the output from the CCD dummy elements (optical black level).

9.3.7 White Peak Limit Circuit

There is a protection circuit which limits the white peak voltage to 3.7 V. This is to prevent dark printouts resulting from an abnormally high reference voltage caused by strong light intruding into the scanner.

9.4 BINARY PROCESSING

The 6-bit digital image data is sent from the A/D conversion PCB to the image processing PCB. The digital data are inverted to match the binary processing circuit of the image processing PCB. Therefore, the white peak level becomes 0, and the black level becomes 63. Then the 6-bit data is converted into 1-bit data (black or white pixels) in the binary processing circuit. The binary process for the line mode is different from that for the photo mode.

1) Line Mode: MTF (Modulation Transfer Function) Correction
2) Photo Mode: Error Diffusion or Dither Processing

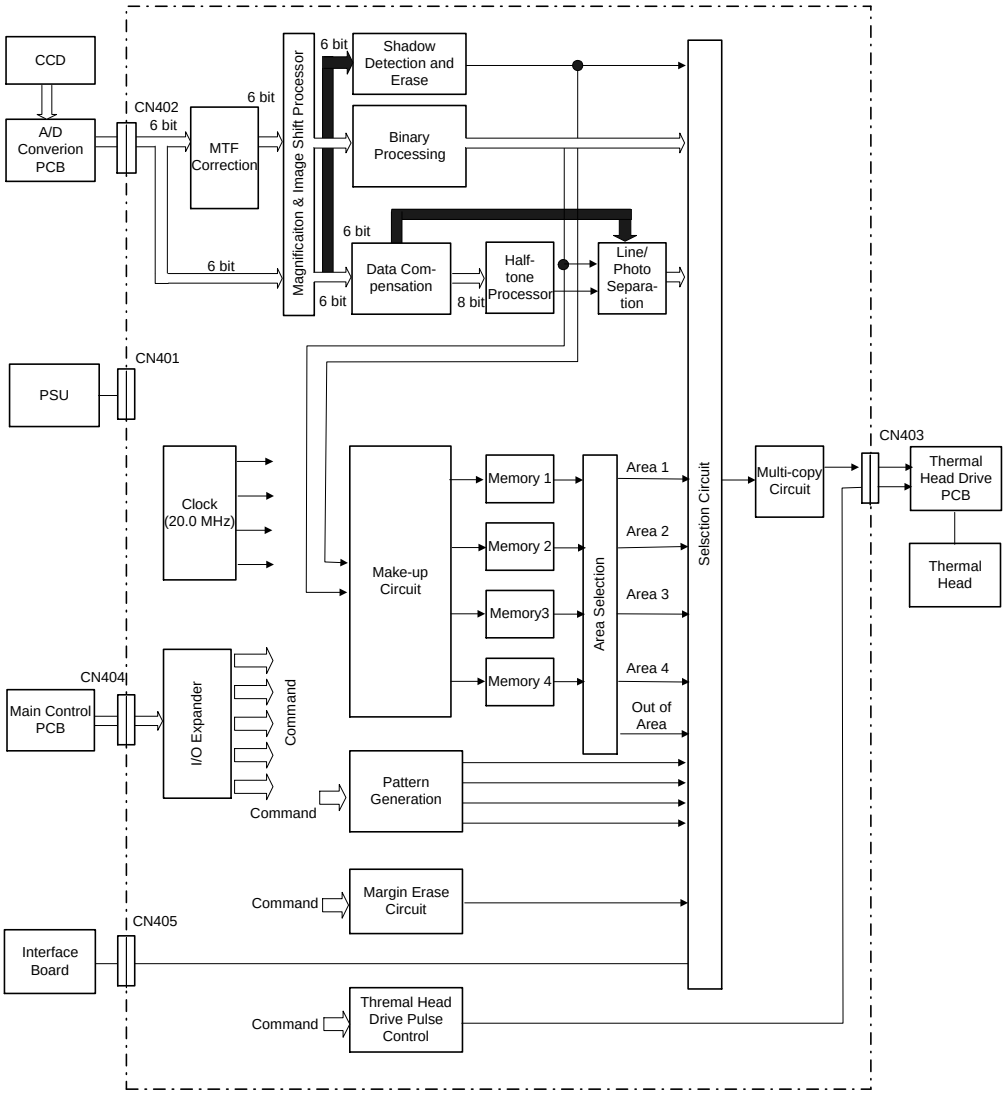

C223D586.wmf

9.4.1 MTF Correction

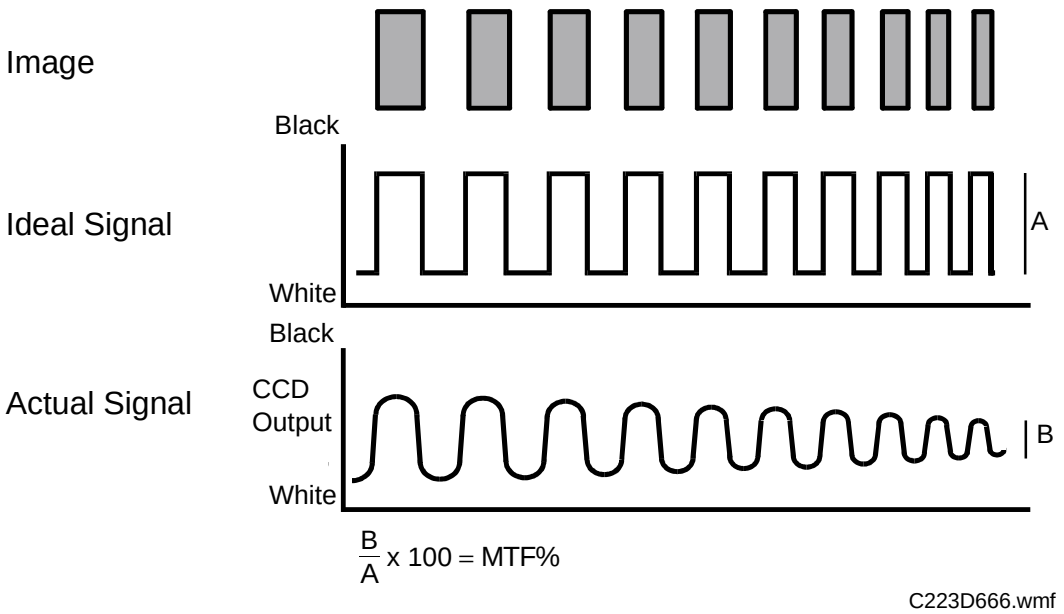

When the original image is converted to electrical signals by the CCD, the signal deteriorates and contrast is reduced. This is because neighboring black and white parts of the image influence each other. The lens' characteristics are the main reason for this. This symptom is typical when the width and spacing of the black and white areas are narrow. The ratio of the difference between the black and white levels of the electrical signal (the actual difference) and the difference between that of the original (the ideal difference) is called the Modulation Transfer Function (MTF).

If the MTF is too low, edges on the image tend to be lost. In this model, MTF correction is used to emphasize 6-bit image data in the line mode. This helps to reproduce characters better.

A target pixel value is compared with the values of the surrounding pixels and is compensated. If the surrounding pixels are very different (compared with the target pixel) then the target value will be more influenced by them. This step is repeated for all pixels of the original.

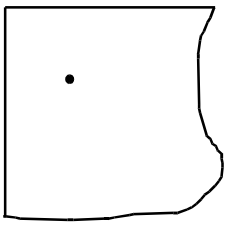

(a) Section of document

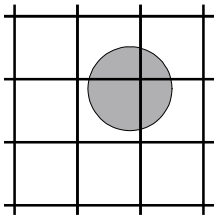

(b) Enlarged view of dot

0	0	0	0
0	12	4	0
0	30	12	0
0	0	0	0
0	0	0	0

(c) Image data after A/D conversion

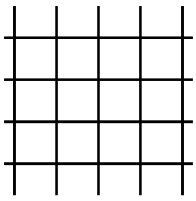

(d) Print without MTF correction (threshold level: 32)

C223D667.WMF

Consider a small black point on a original as shown in the illustration (a) and (b). The 6-bit image data (range 0 to 63) for this section of the original is shown in (c). If the the threshold level is 32, all the pixels in this area will becomes single-bit white data and the image will not be reproduced (d).

The MTF correction prevents this image loss as follows:

		–1/2		
–1/8	–3/8	3 X	–3/8	–1/8
		–1/2		

C223D668.wmf

The value of the target pixel is multiplied by 3. Then, 3/8 of the values of the pixels to the left and right, 1/8 of the values of the pixels two steps to the left and right, and 1/2 of the values of the pixels above and below are subtracted from the new value of the target pixel. (If the result is less than zero, then the pixel value is set to zero.)

0	0	0	0
0	19.5	1.5	0
0	63	22.7	0
0	0	0	0
0	0	0	0

(e) Image data after MTF correction

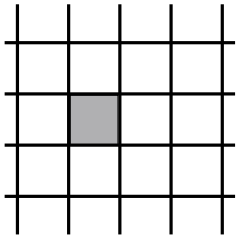

(f) Print after MTF correction

C223D624.wmf

After the MTF correction is applied, the image data of the example is as shown in (e) and (f) above. The small black point is reproduced on the print.

The correction values in the sub-scanning direction can be changed by using SP mode no. 31. The correction values for each setting of SP no. 31 are as follows:

SP31-0: Low

		–1/4		
–1/8	–3/8	2 1/2	–3/8	–1/8
		–1/4		

SP31-1: Standard

		–1/2		
–1/8	–3/8	3	–3/8	–1/8
		–1/2		

SP31-2: High

		–1		
–1/8	–3/8	4	–3/8	–1/8
		–1		

SP31-3: Maximum

		–2		
–1/8	–3/8	6	–3/8	–1/8
		–2		

C223D625.wmf

The SP mode is normally set at 0 (factory setting). Setting it at 1, 2 or 3 will help to reproduce low contrast originals better.

NOTE: If SP31 is set to a higher level (2 or 3), stains, scratches etc. in the light path will appear on prints more easily.

9.4.2 Main Scan Magnification And Image Shift Processing

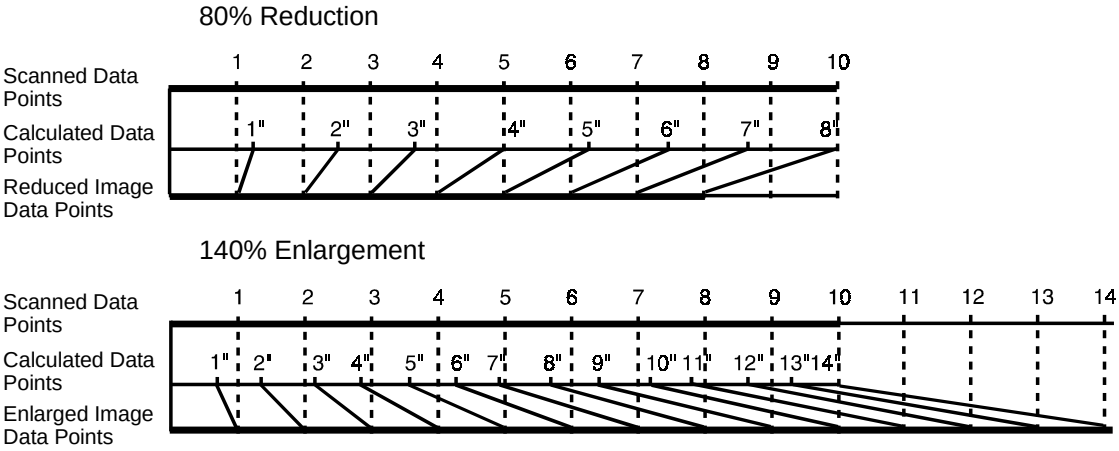

C223D626.wmf

– Main Scan Magnification –

Reduction and enlargement in the sub-scanning direction is done by changing the original transport motor speed (see the diagram). Reduction and enlargement in the main scanning direction is handled by the magnification and image shift processing.

Pixels for scanning and master making are generated at fixed intervals (the CCD and thermal head element intervals). The image is scanned at the CCD element interval. If pixels on the master are plotted at the same interval (by the thermal head elements) then the master image is the same size as the original.

80 % Reduction

For example, data for 10 pixels in a main scan line are scanned by the CCD. Those data are compressed into data for 8 pixels by the magnification processor. As a result, the image is reduced to 80 %.

140 % Enlargement

Data for 10 pixels of a main scan line are expanded into data for 14 pixels. As a result the image is enlarged with a 140 % magnification ratio.

When actual pixels are divided in accordance with a magnification ratio, the values of the imaginary points that would correspond to new pixels are calculated by the magnification processor. The proper value for each imaginary point is calculated based on the image data of the surrounding pixel values.

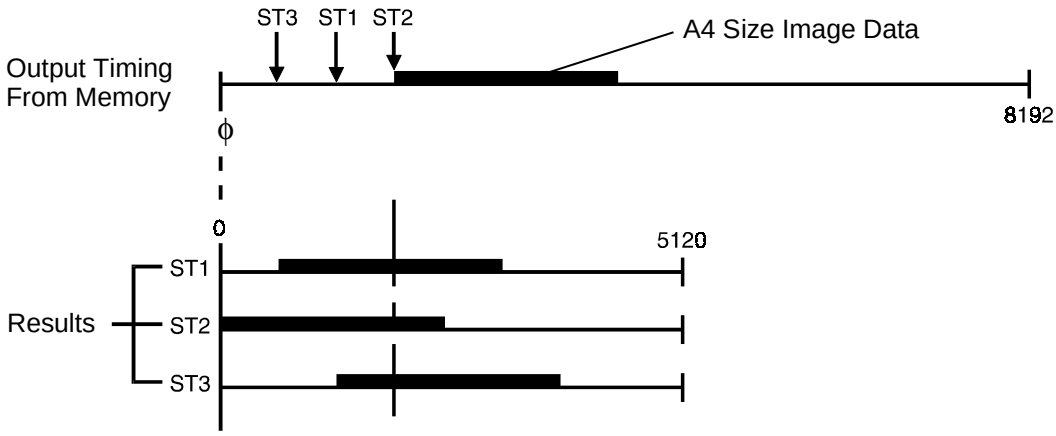

C223D627.wmf

– Image Shift –

This model can reposition the image of the original by using the image shifting mode. The image position change in the sub-scanning direction is done by changing the timing of the original scanning or of the master making process. In the main scanning direction, it is done by the magnification and image shift processor, simultaneously with the magnification process.

Data for one main scan line are once stored in a line memory. This memory has enough room to hold one main scan line, and it has a little extra capacity. When the data is output from memory, the output timing can be adjusted by entering the desired value in the image shifting mode.

9.4.3 Binary Processing

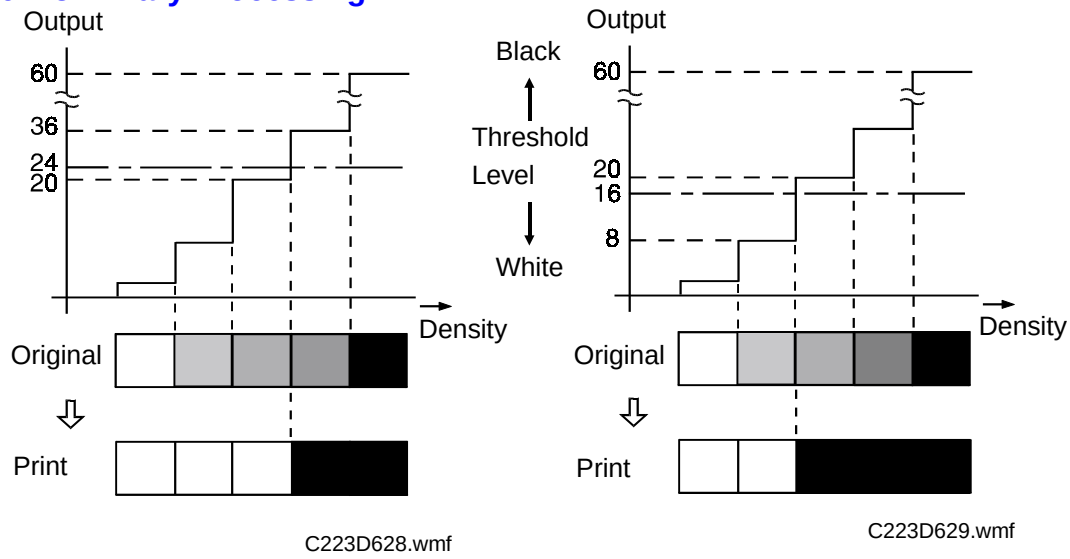

[Threshold Level 24] [Threshold Level 16]

The binary processor converts 6-bit image data to single-bit white or black data to send it to the thermal head. This processor is used only for the line mode. (The binary processing for the photo mode is done by the half-tone processor.)

In this process, all pixel image data are compared with a single threshold level. A pixel datum is set to black if it is above the threshold level, or it is set to white if it is equal or below the threshold level. (See the above figure.)

The threshold level varies depending on the image density setting. This level is selected by the Image Density key (Lighter, Normal, Darker 1, and Darker 2). The image can also be darkened or lightened by SP mode No. 32 as shown below:

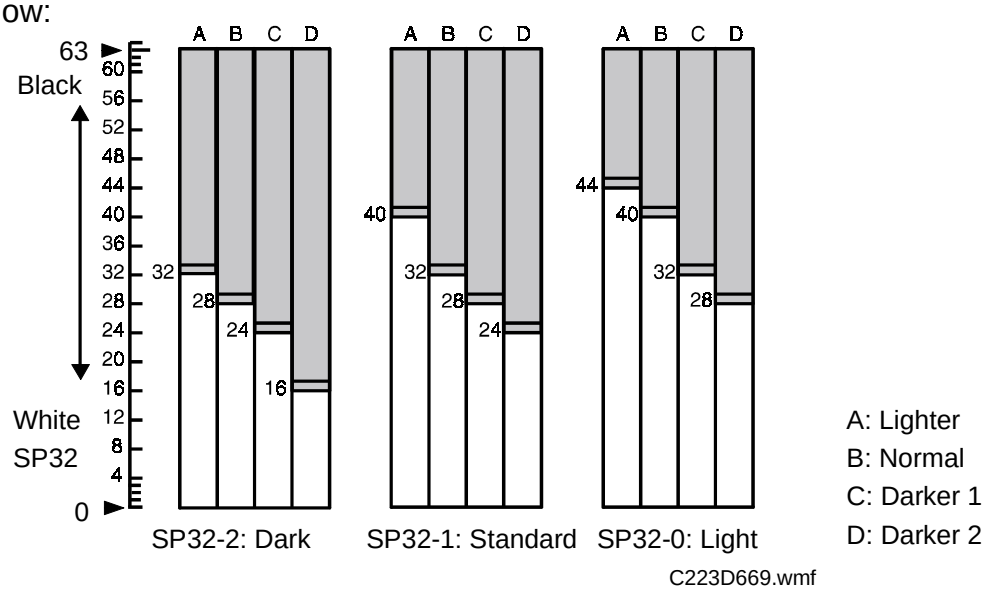

9.4.4 Photo Data Compensation Processing

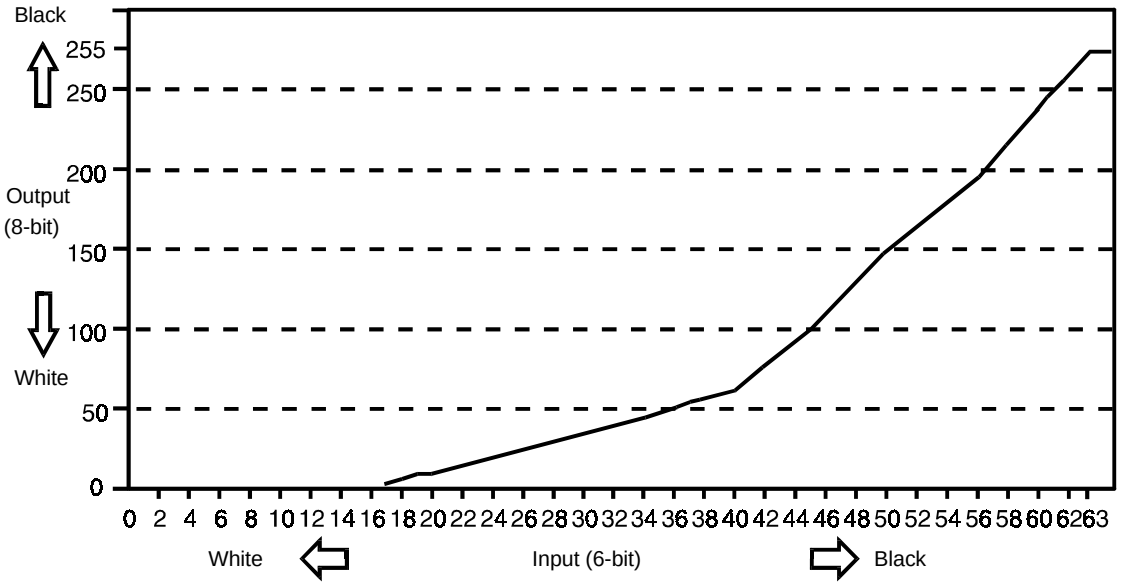

C223D670.wmf

The photo data compensation process is used only when the photo mode is selected.

In this process, 6-bit image data are compensated based on the selected image density. The user selects the density with the Image Density key (Lighter, Normal, Darker 1, or Darker 2). When the photo mode is selected with the make-up mode, the contrast of the Normal, Light Tone, and Dark Tone settings can also be changed by changing the compensation ratio. The compensated image data is output as an 8-bit signal to obtain more graduation steps. Therefore, this increases resolving power for half-tone images. The above graph shows one of the compensation ratios for input and output.

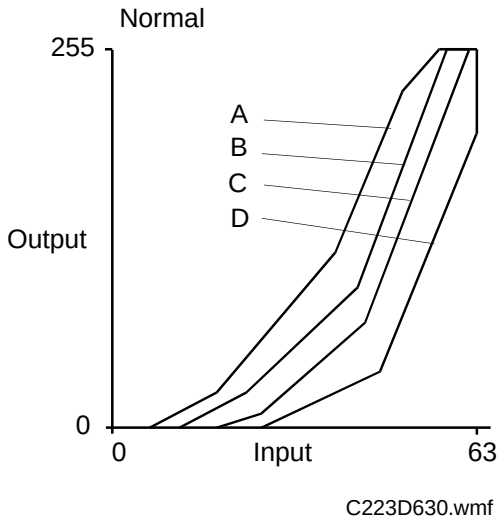

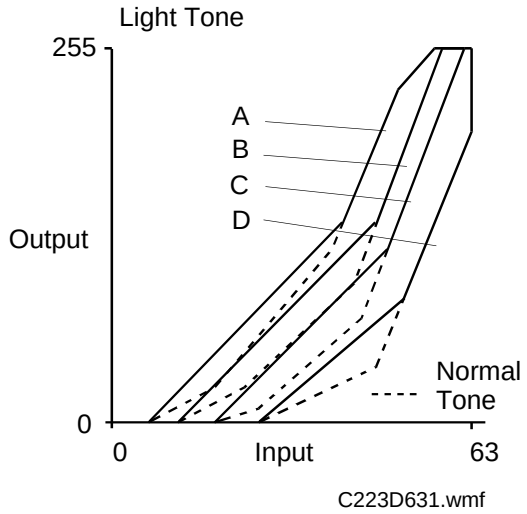

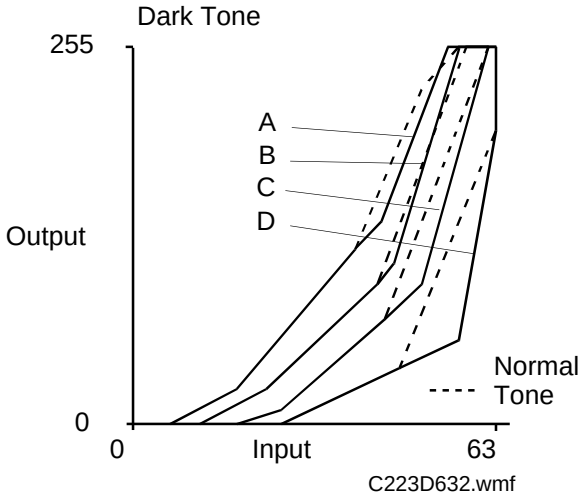

A: Darker 2
B: Darker 1
C: Normal
D: Lighter

The compensation ratio varies depending on which image density and contrast are selected. For example, when Darker 1 is selected, the output value of the image data is increased slightly (i.e. it is slightly higher than the output obtained when Normal density is selected).

When Light Tone is selected, the 8-bit output concentrates on the light tone part of the image (the low input value). This helps better reproduce the lighter parts of the image and the whole image will darken a bit. On the other hand, when Darker Tone is selected, the 8-bit output concentrates on the dark tone parts of the image. This helps better reproduce the darker parts of the image and the whole image will lighten a bit.

The above graphs show the compensation ratios for each contrast and image density setting.

9.4.5 Half-tone Processing

In photo mode, the 8-bit image data from the photo data compensation processor are converted into single-bit white or black pixels in the half-tone processor. This helps reproduce half-tone images (such as photographs). For half-tone images, this process works better than the binary process.

When the photo mode is selected, three types of half-tone processing can be selected with the Screen key (Normal, Fine, and Coarse). The normal type (non-screen) is selected first, when the photo mode key is is pressed.

– Error Diffusion Processing –

Error Diffusion Processing is used when a screen mode is not selected (i.e., when Normal is selected).

When an image signal is converted into a single-bit (white or black) signal based on a threshold level, a difference is yielded between the image signal value and the complete white value (255 in 8-bit signal) or black value (0). With Error Diffusion Processing, the difference is distributed among the surrounding pixels. (The binary process simply erases these differences.)

For example, when considering a one dimensional Error Diffusion Processing, the image data shown in the diagram (see the next page) produces white and black data as outputs as follows.

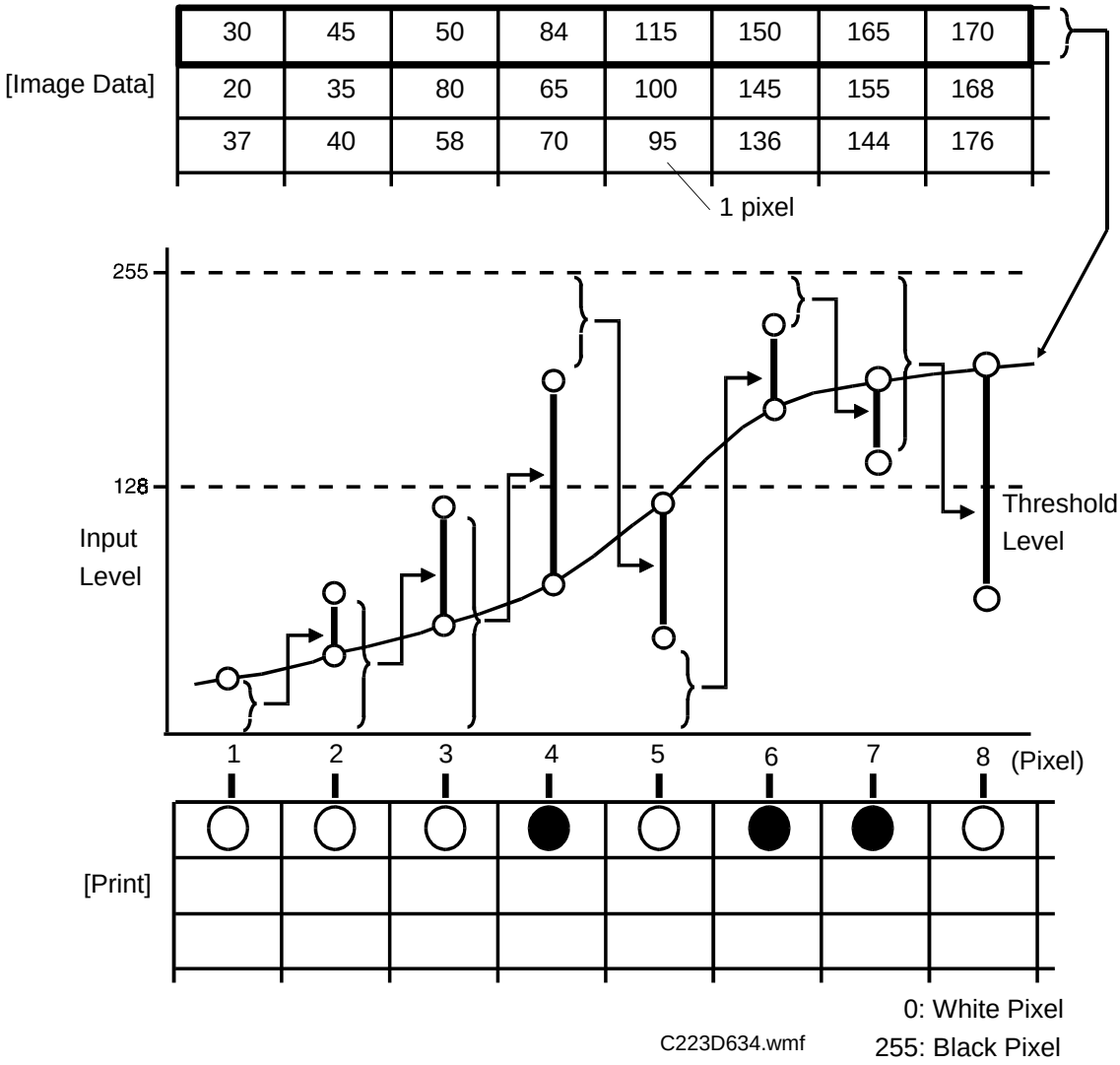

Detailed Descriptions

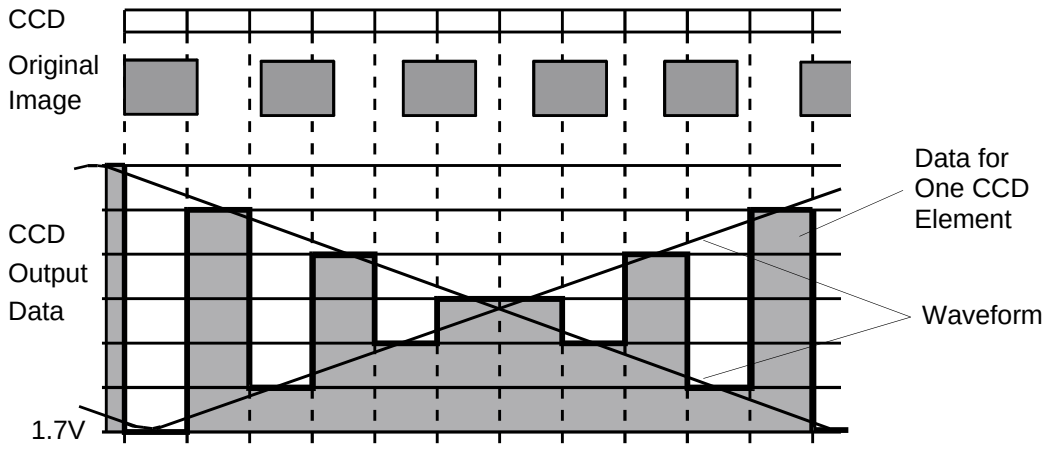

C223D635.wmf

– Moire –

When the CCD scans an image made up of regular lines such as a resolution chart, the output image may have another regular pattern over the regular lines. This is called "moire".

The above illustration shows one of the moire mechanisms. In this case, the pixel density of the CCD is the same as the density of the regular lines on the original. However, the regular lines are slightly out of step with the CCD pixels due to some magnification error when they were scanned. As a result, each CCD pixel has a different value (as shown in the above figure). Since the length of a CCD pixel is very short, the waveform from the CCD output looks like the cross lines in the figure. The moire pattern appears when prints are made from this signal. The moire pattern typically appears when the CCD pixel density is a multiple of the density of the regular lines on the original.

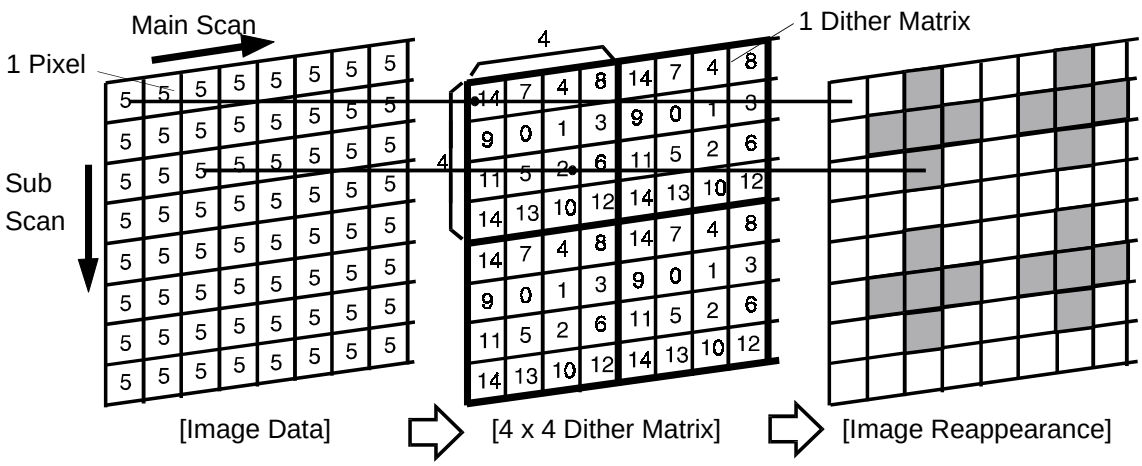

All pixels' values from 4-bit data are at 5. (Gray Image)

The number shows the threshold level for each pixel.

Shaded pixels show black dots.

C223D637.wmf

– Dithering –

Dithering is used when the screen mode is selected in Photo mode. Two kinds of dither matrices are used for the fine and coarse screen level.

Dithering converts 8-bit image data into single-bit white or black data.

A dither matrix contains various threshold levels (Vthn) for the locations which correspond to some pixels of an original image. Each pixel datum of the scanned image (En) is compared with the corresponding fixed threshold level (Vthn) in the dither matrix. Then, each pixel datum is converted to either black or white depending on whether the image data is greater or less than the threshold level. This procedure is repeated for the whole area of the original. The thresholds of the dither matrix are determined so that half-tone graduations are introduced on prints using only black and white pixels. This is done by changing the ratio of black pixels to white pixels.

The figures above show an example of a 4 x 4 (16 pixels) dither matrix and dithering for 4-bit data scanned from an imagined gray image. The result of dithering (image reappearance) shows the pattern of white and black dots, which appears gray to the human eye.

[Fine Screen]

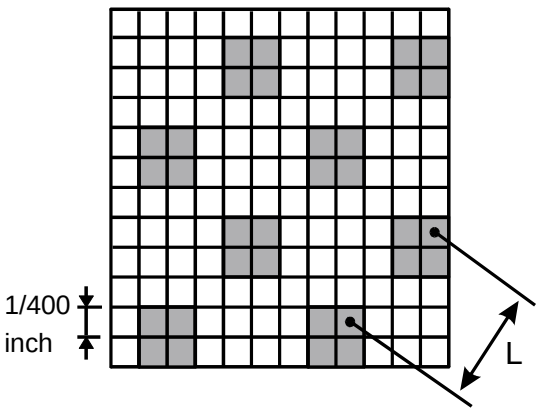

[Coarse Screen]

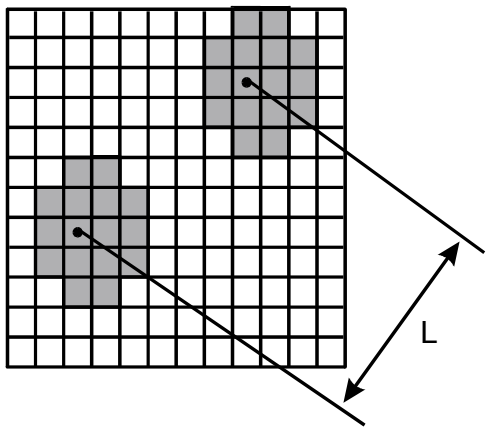

C223D637.wmf

$L = \frac{1}{400} \times 3 \times \sqrt{2}$ inches
(100 Lines/inch)

$L = \frac{1}{400} \times 6 \times \sqrt{2}$ inches
(50 Lines/inch)

In this model a 12 x 12 dither matrix is used to convert 8-bit image data into single-bit data. There are two kinds of dither matrices to allow for the fine and coarse screen modes.

A uniform gray area of an original is scanned, and the pixel datum is set at 55. It then goes through the dithering process and the results (both for coarse screen and fine screen) are shown above.

9.4.6 Line/Photo Separation

In the Line/Photo mode, the machine checks each pixel of the original to see if the pixel is in a line area or a photo area. To recognize a line area in a photo original, the CPU does the following calculation on the 6-bit pixel data.

Main Scan Direction

Sub-scan Direction

I	H	G
F	E	D
C	B	A

C223D638.wmf

$$X = |E–F| + |E–D|$$
$$Y = |E–H| + |E–B|$$

In the following conditions, the machine recognizes that pixel E is in a line area of the image, and replaces it with the value of the same pixel calculated with the MTF process.

(F = 0 or D = 0) and (x > threshold level)
or
(H = 0 or B = 0) and (y > threshold level)

The threshold level changes depending on the image density, contrast, and the SP34 setting.

Contrast	Image Density	Threshold
Standard	Lighter	18
	Normal	16
	Darker 1	22
	Darker 2	22
Light	Lighter	16
	Normal	14
	Darker 1	14
	Darker 2	14
Dark	Lighter	8
	Normal	10
	Darker 1	14
	Darker 2	14

(When "0" is selected with SP34)

9.4.7 Multi-copy Circuit

If Quadruple copy mode is selected, one main scan line from the original is output twice to make one line of the printed image as shown below.

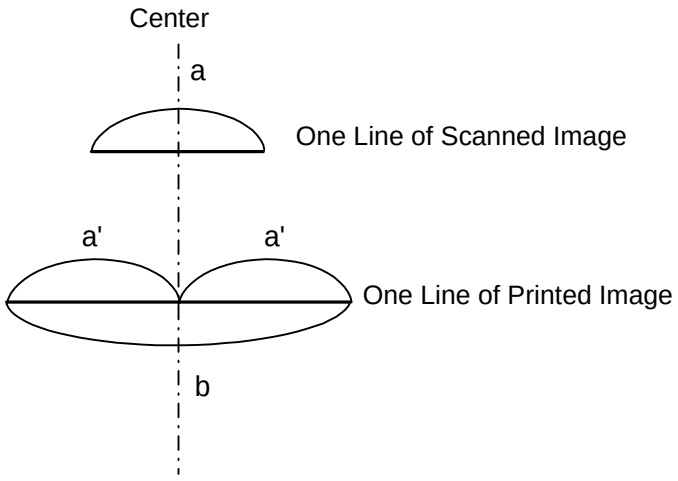

C223D639.wmf

The original scan width is calculated with the following formula:

$$\text{Scan Width (a)} = \frac{\text{Paper Width (b)}}{2 \times \text{Magnification Ratio}}$$

9.4.8 Shadow Detection in Platen Mode

In platen mode, to detect which part of the scanned area is the original, and which parts are shadows, the machine compares each 6-bit pixel value of scanned area with a threshold level. This is done before the MTF correction. If the data within a certain area are greater than the threshold level, and the area is not surrounded by white areas, the machine recognizes that the area is not part of the original and the area is erased.

1) Shadow Erase Threshold in Line Mode

Image Density Setting	Threshold Level
Lighter	27
Normal	19
Darker 1	14
Darker 2	10

2) Shadow Erase Threshold in Photo Mode

Contrast	Image Density	Threshold Level
Normal	Lighter	23
	Normal	17
	Darker 1	11
	Darker 2	6
Light Tone	Lighter	31
	Normal	27
	Darker 1	20
	Darker 2	12
Dark Tone	Lighter	12
	Normal	9
	Darker 1	6
	Darker 2	2

Exceptions

If the shape of the originals are as shown below, the black areas cannot be recognized as shadows.

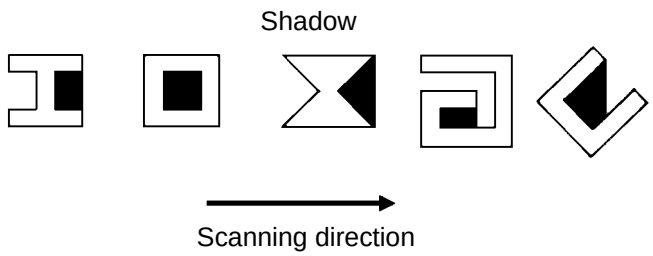

C223D596.img

9.4.9 Make-up Processing

If an optional Make-up Function Board is installed, Image Make-up mode is available.

– Overall Operation –

The user makes command sheets to specify how various areas of the original should be processed. The command sheets must be scanned before the original. The command sheet is scanned twice as fast as the original. The image data for the command sheet are digitized and converted to single-bit white or black data. They also go through normal image processing in the line mode. The image data for a command sheet are reduced to 1/80 and stored in the corresponding memory area.

The command sheet data are picked out of memory through the area selector when image data from an original are sent to the selection circuit. When the areas designated by two or more command sheets overlap, the data from the last command sheet are picked out from the corresponding memory by the area selector.

The image data from the original and the command sheet data are combined and edited in the selection circuit. When a pattern mode is selected, the pattern generator sends the selected background pattern(s) to the selection circuit. The image data from the original, the command sheet data, and the pattern data are combined and edited in the selection circuit as ordered.

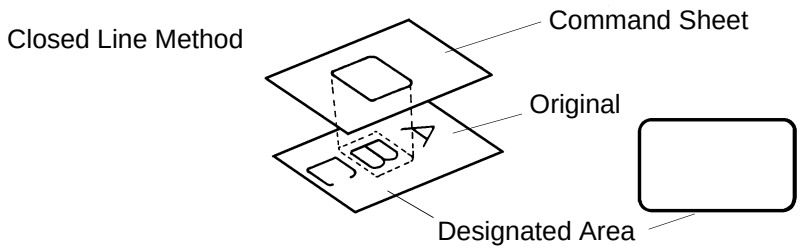

C223D640.img

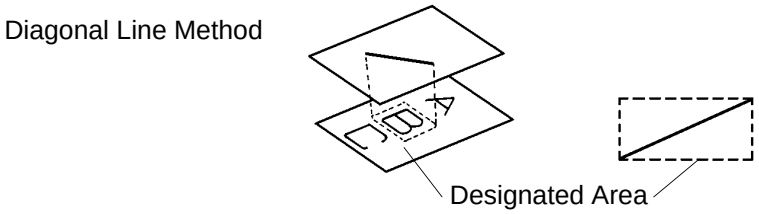

C223D641.img

– Make-up Mode –

A variety of editing functions can be selected in the make-up mode as follows:

Step 1 Make command sheet(s) to designate the areas to be edited. The diagonal line method or closed area method can be used on a command sheet to designate areas. Up to four command sheets can be used at a time to designate areas for an original. If designated areas on two or more command sheets overlap, the data from the last command sheet will apply for the overlapped portion.

Step 2 Select the appropriate command number for the designated areas using the number keys. Only one command can be selected for each command sheet (up to four sheets) from seven modes. (See the following table of modes that can be selected areas.) When two or more command sheets are used, select an appropriate mode for each command sheet.

When a pattern mode is selected, also select an appropriate background pattern using the Number keys. There are 40 patterns from 1 to 40. (See the following list of background patterns.) Patterns 51 to 90 are the same as patterns 1 to 40 but the pattern elements are twice as large. By adding 100 to the pattern numbers of 1 to 40 and 51 to 90, the patterns rotate 90°. Therefore, there are 160 patterns in all.

Step 3 Select an appropriate command number for the outside of the designated areas using the number keys. Even if two or more command sheets are used at a time, only one command can be selected for all command sheets from four modes. (See the following table of modes that can be selected, for outside designated areas.)

Step 4 Set the command sheets and original in the ADF so that the command sheets are scanned prior to the original.

– Modes for Designated Areas –

The following commands are for the designated area(s).

MODE		SAMPLE			COMMAND NO.	
Designated Area		Command sheet / Original (closed area method)		Print	Closed area method	Diagonal line method
1.	Line mode	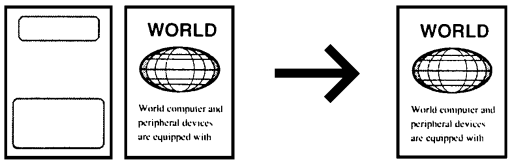			Fn 1	Fn 11
2.	Outline mode	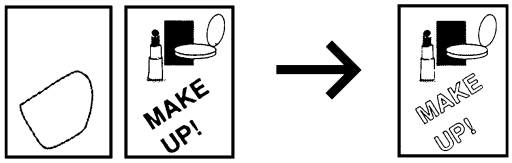			Fn 2	Fn 12
3.	Delete mode	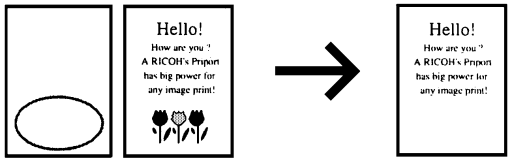			Fn 3	Fn 13
4.	Photo mode	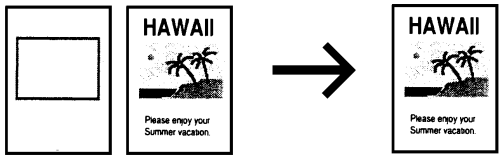			Fn 4	Fn 14
5.	Image pattern mode	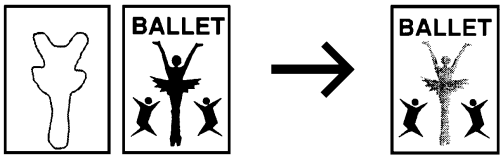			Fn 5	Fn 15
6.	Area pattern mode	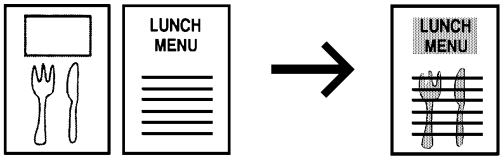			Fn 6	Fn 16
7.	Image outline & Area pattern mode	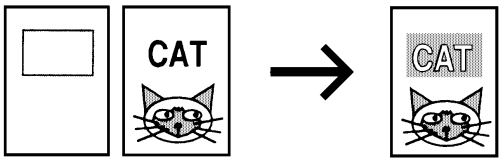			Fn 7	Fn 17

C223D642.img/C223D643.img

Detailed Descriptions

– Modes for Outside Designated Areas –

The following commands are for the area outside the designated area(s).

MODE Undesignated Area		SAMPLE Command sheet / Original	Print	COMMAND NO.
1.	Line mode	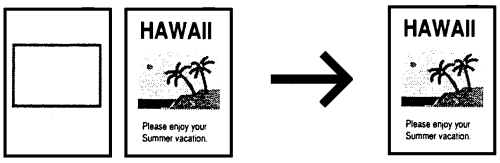		**Fn 1**
2.	Outline mode	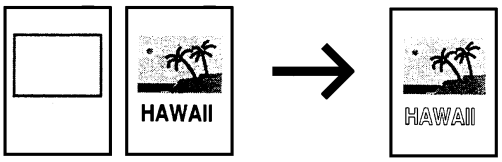		**Fn 2**
3.	Delete mode	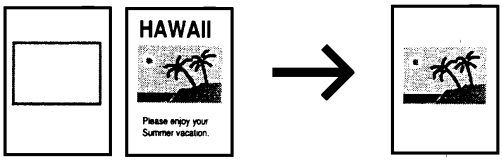		**Fn 3**
4.	Photo mode	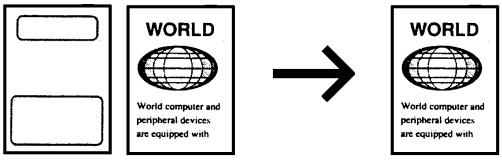		**Fn 4**

C223D644.img

– Recognition of Designated Areas –

How you enter the designated area will affect the final result. Therefore, refer to the following table when you make the command sheet.

No.	Item	Typical Problems		Preferred Designated Area
		Designated Area	Area Recognized	
1	Form of the designated area	Serial pattern 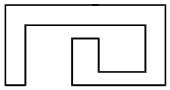 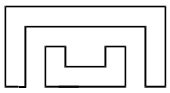 C223D645.wmf	The designated area is recognized as follows: 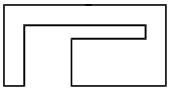 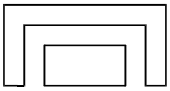 C223D646.wmf	Separation the area to be designated as follows: 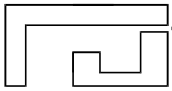 Make a space more than 2 mm. 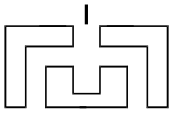 Make a space more than 2 mm. 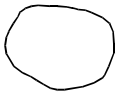 Designate the area with a closed line. C223D647.wmf
		Double circle pattern. 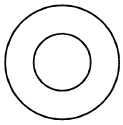 C223D648.wmf	Only the outer circle will be recognized as follows: 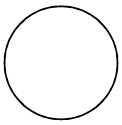 C223D649.wmf	Either'. 1) Make a small gap (more than 2 mm) in the pattern. 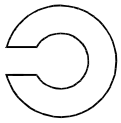 C223D650.wmf Or'. 2) Use one command sheet for the one circle pattern. The smaller circle must be read as the designated area after the larger circle is read.
2	Non-closed line	The designated area is not a closed loop. 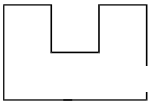 C223D651.wmf	The designated area is not recognized.	Designate the area with a closed loop. 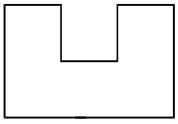 C223D652.wmf

No.	Item	Typical Problems		Preferred designated area
		Designated area	**Area recognized**	
3	Thickness of the designating line	The thickness of the line must be as follows: X ≤ 1 mm Y ≤ 0.6 mm (In Full Size Mode) 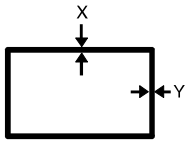 C223D653.wmf	If the line of the designated area is too thin, no designated area is recognized.	Mark with a line more than 1 mm in width. (More than 2 mm for 50% reduction mode.)
4	Density of the designated line	A pencil or a color pen was used. (The line has low image density.)	If the designating line is too light, no designated area is recognized.	Mark using a black pen.
5	Type of command sheet	1) Rough paper is used as a command sheet. 2) If the command sheet has a different friction coefficient from the original.	1) Any fibrous black spots will be read as a designated area. 2) Due to different registration of the original and the command sheet, the designated areas will be different from the imagined positions.	1) Use white paper (65 g/m^2). 2) Use the same paper as the original.

No.	Item	Typical Problems		Preferred designated area
		Designated area	Area recognized	
6	Gap between the designated area and neighboring image, or gap between two designated areas.	When the gap between the designated area and the neighboring image is too small.	Depending on the original feed condition (registration and skewing) or neatness when outlining the designated area, the neighboring image may or may not be recognized as a designated area.	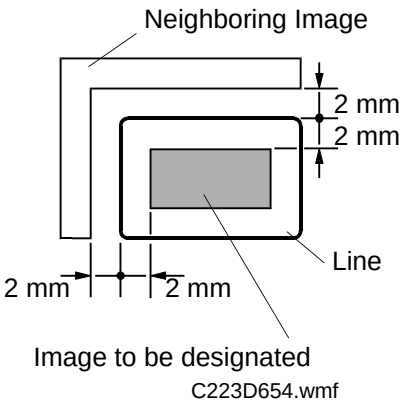 1) There should be more than 2 mm clearance between the line and the image. 2) Mark the line more than 2 mm away from the image in the designated area so that the image is recognized completely. 3) For best results, approximately 5 mm is needed between the neighboring image and the image to be designated.

9.5 MASTER MAKING

9.5.1 Thermal Head

A thin-film type thermal heating element is used in the thermal head. The thermal heating elements melt the over-coating and polyester film layers of the master in response to image signals for each pixel. The specifications are as follows:

Maximum Master Making Width:292.6 mm

Number of Thermal Heating Elements 4608 dots

Density of Thermal Heating Elements 400 dpi

The power supply PCB applies power (VHD) to the thermal heating elements through the thermal head drive PCB. The power source (VHD) varies from one head to another since the average resistance of the elements varies. Therefore, when the thermal head or power supply PCB is replaced, it is necessary to readjust the applied voltage to the particular value indicated on each thermal head (see Replacement and Adjustment: Thermal Head Voltage Adjustment).

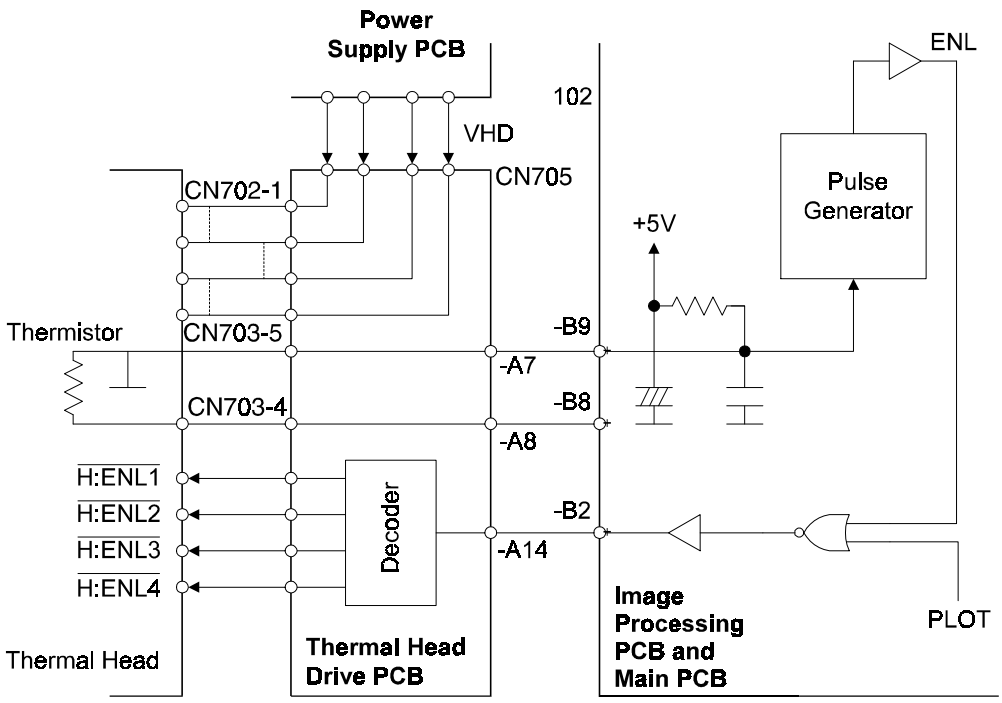

C223D597.wmf

9.5.2 Thermal Head Control

The energy applied to the thermal heating elements is determined by the length of time (t) for which power is applied.

The time depends on the thermal head temperature which is detected by the thermistor on the thermal head. If the temperature is higher, the time (t) will be shorter.

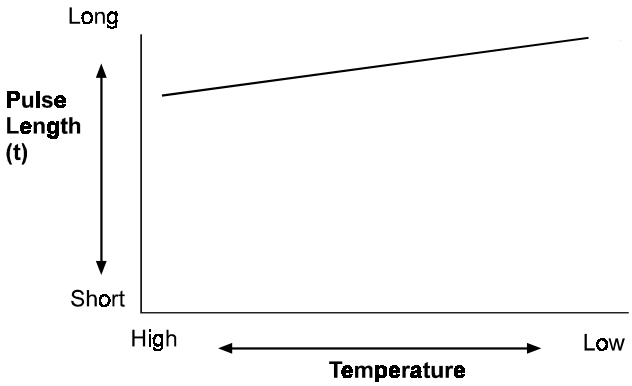

C223D598.wmf

The time (t) is determined when the Master Making key is pressed, and it is kept constant until the current master is finished.

Each thermal element receives data twice to make one pixel.

C223D599.wmf

1) The 1st datum depends on whether the previous pixel was black or white. If the previous pixel was black, the 1st output for the next pixel is white. If the previous pixel was white, the 1st output for the next pixel is black. This is to counterbalance the effect of the previous heating element's condition on the next pixel.

2) The 2nd datum is the actual image datum for that pixel.

9.5.3 Thermal Head Protection

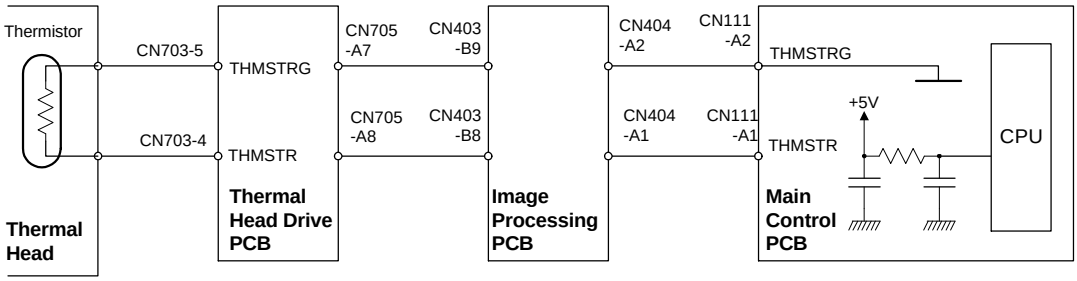

C223D655.wmf

The thermistor on the thermal head and a thermal guard (a thermostat) on the PSU are used for thermal head protection. This prevents the thermal head and power supply unit from overheating when continuously processing a solid image.

The CPU detects an abnormal condition when the Master Making key is pressed, and indicates an SC code on the operation panel under the following conditions:

Detecting Component	Conditions	SC Code
Thermistor	Over 54°C (CN111-A1 is under 1.17V)	E-04
	Under –20°C (Thermistor Open)	E-09

10. OTHERS

10.1 TEST SWITCH

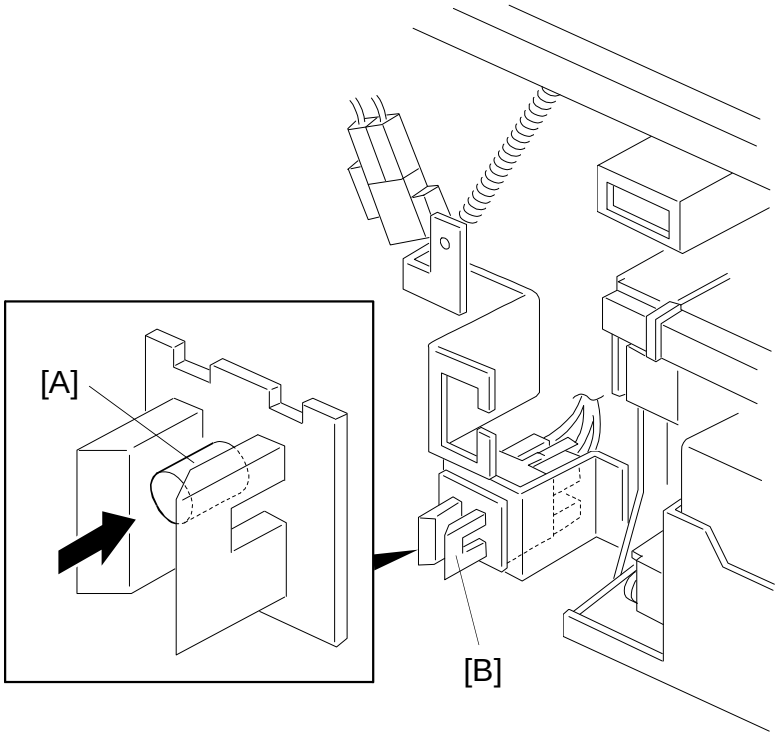

C223D671.wmf

Push in the actuator [A] of the test switch [B] located inside of the inner cover to disable the front door, paper table, master eject unit, and scanner unit safety switches. The safety switches remain deactivated as long as the actuator is pushed in.

10.2 MASTER MAKING AND PRINTING AREAS

Items	Standard	Note
– A3/DLT Drum: Length –	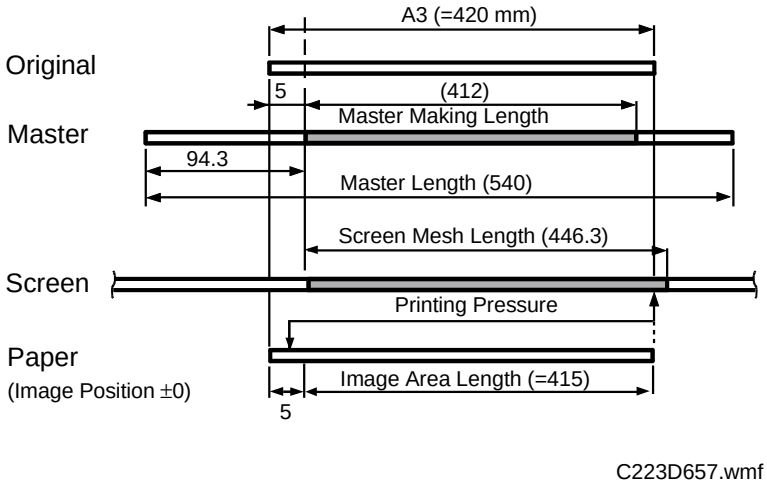	1) Master making area changes with aper size. 2) In enlarge or reduce mode, the 5 mm margin is not enlarged or reduced. 3) If the machine knows the paper size, it allows for a 3 mm blank margin at the paper's trailing edge. If paper size detection is canceled with an SP mode, the machine will not print the last 2 mm of the original on the master.
When the Multi-copy mode is selected.	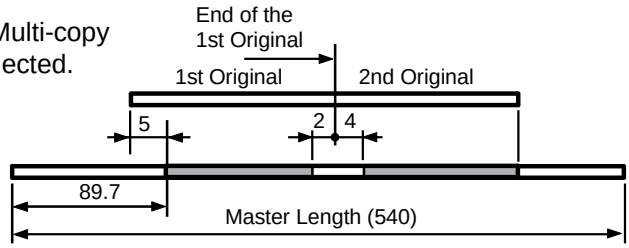	4) In Multi-copy mode, the trailing edge of the 1st image has a 2 mm margin and the leading edge of the 2nd image has a 4 mm margin. (These margins vary with the magnification ratio.)

Maximum Image Length:	415 mm
Maximum Master Making Length:	420 mm
Screen Mesh Length:	446.3 mm
Master Cut Length:	540 mm

Items	Standard	Note
– A4/LT Drum: Length –		1) Master making area changes with paper size.
	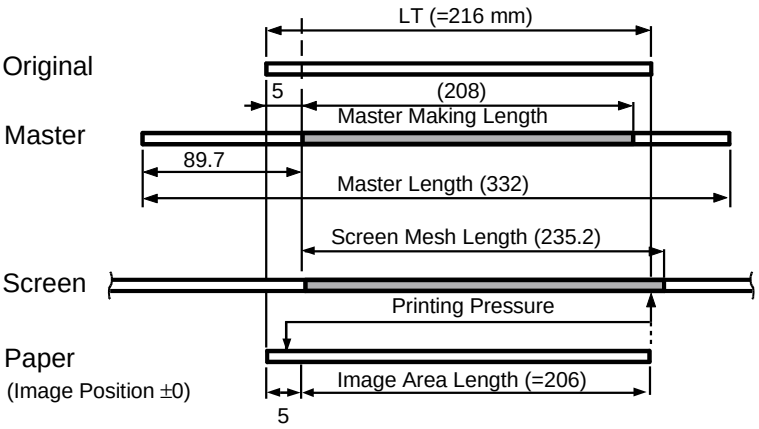 C223D657-2.wmf	2) In enlarge or reduce mode, the 5 mm margin is not enlarged or reduced. 3) If the machine knows the paper size, it allows for a 3 mm blank margin at the paper's trailing edge. If paper size detection is canceled with an SP mode, the machine will not print the last 2 mm of the original on the master.
When the Multi-copy mode is selected.	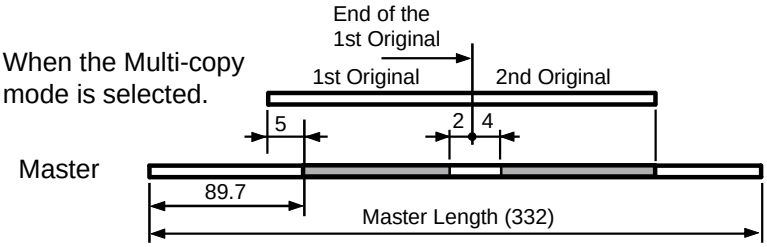 C223D658-2.wmf	4) In Multi-copy mode, the trailing edge of the 1st image has a 2 mm margin and the leading edge of the 2nd image has a 4 mm margin. (These margins vary with the magnification ratio.)
	Maximum Image Length: 206 mm	
	Maximum Master Making Length: 211 mm	
	Screen Mesh Length: 235.2 mm	
	Master Cut Length: 332 mm	

Detailed Descriptions

Items	Standard	Note
– A3/DLT Drum: Width –	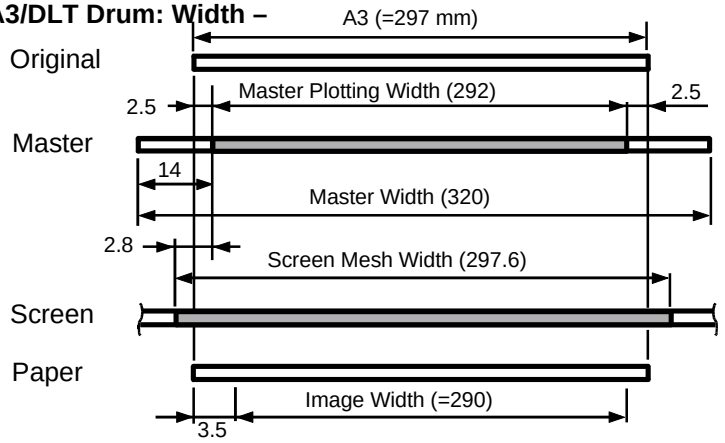 C223D661.wmf Maximum Image Width: 290 mm Master Making Width: 292 mm Screen Mesh Width: 297.6 mm Master Width: 320 mm	In enlarge or reduce mode, the center of the image does not shift.
– A4/LT Drum: Width] –	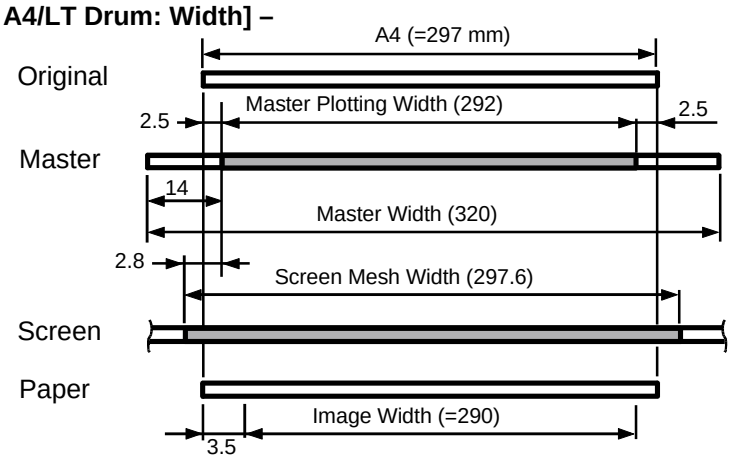 C223D661-2.wmf Maximum Image Width: 290 mm Master Making Width: 292 mm Screen Mesh Width: 297.6 mm Master Width: 320 mm	In enlarge or reduce mode, the center of the image does not shift.

Items	Standard	Note
– Master Making Length in Relation to Paper Size –	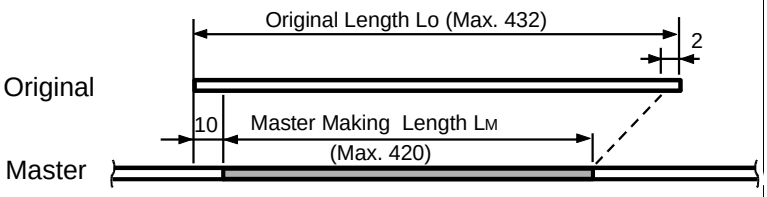 C223D663.wmf Master Making Length $L_M = (L_o - 5 - 2) \times \frac{\alpha}{100}$ A3/DLT $L_M \leq 420$ A4/LT $L_M \leq 211$ α: Magnification Ratio (%)	The machine will not print the last 2 mm of the original on the master.

Detailed Descriptions

10.3 PAPER MISFEED DETECTION

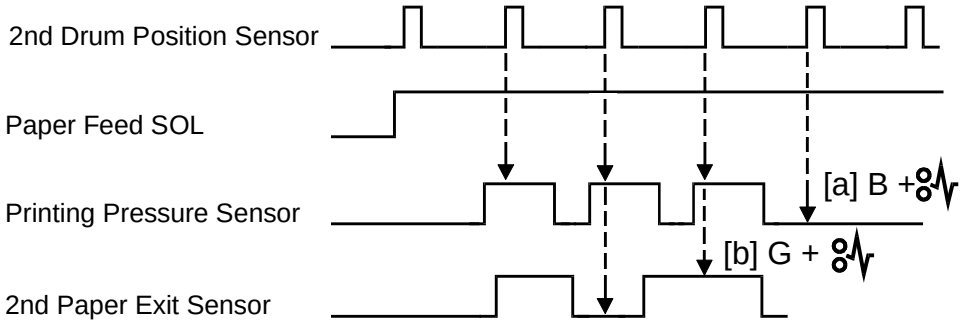

C223D664.wmf

[a] When the 2nd drum position sensor turns on, if the printing pressure sensor is still OFF, the main PCB detects a paper misfeed.

[b] When the 2nd drum position sensor turns on, if the 2nd paper exit sensor remains ON, the main PCB detects a paper misfeed.

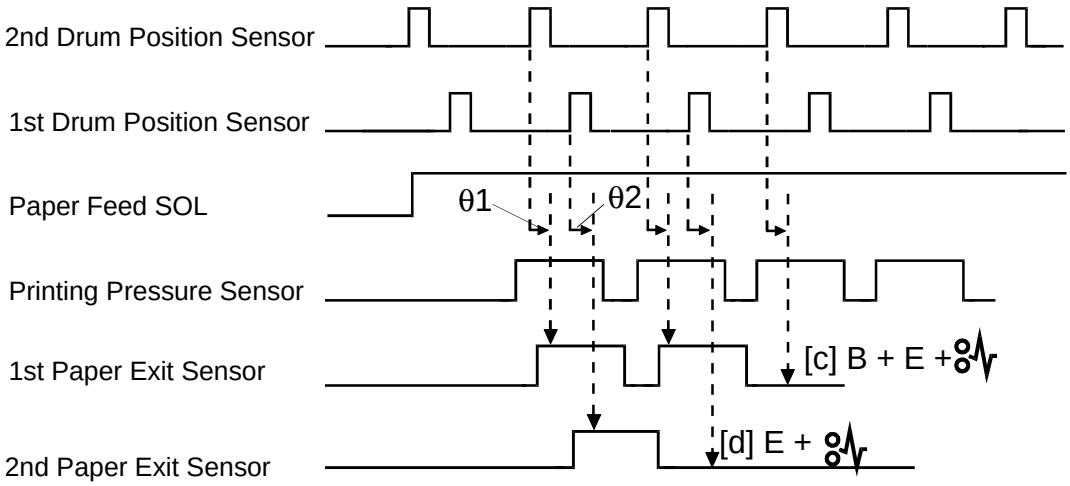

C223D665.wmf

[c] When the drum has rotated 20° (θ1)after activating the 2nd drum position sensor, if the 1st paper exit sensor is still OFF, the main PCB detects a paper misfeed.

[d] When the drum has rotated 25° (θ2) after activating the 1st drum position sensor, if the 2nd paper exit sensor is still OFF, the main PCB detects a paper misfeed.

11. COMBINATION CHART

This combination chart shows which modes can be used together.

❍: means that these modes can be used together.

✗: means that these modes cannot be used together.

★: means that some functions in these modes cannot be used together.

		1	2	3	4	5	6	7	8	9	10	11	12	13	14	15	16
1	Reduction		✗	✗	❍	❍	❍	✗	❍	❍	❍	❍	❍	✗	❍	❍	❍
2	Enlargement	✗		✗	❍	❍	❍	✗	❍	❍	❍	❍	❍	✗	❍	❍	❍
3	Zoom	✗	✗		❍	❍	❍	✗	❍	❍	❍	❍	❍	✗	❍	❍	❍
4	Auto Cycle	❍	❍	❍		❍	❍	❍	❍	❍	❍	❍	❍	★	★	❍	❍
5	Memory/Class	❍	❍	❍	❍		❍	❍	❍	❍	❍	❍	❍	❍	❍	★	❍
6	Multi Copy	❍	❍	❍	❍	❍		❍	❍	❍	❍	❍	❍	✗	✗	❍	❍
7	Directional Mag.	✗	✗	✗	❍	❍	❍		❍	❍	❍	❍	❍	✗	❍	❍	❍
8	Margin Erase	❍	❍	❍	❍	❍	❍	❍		❍	❍	❍	❍	✗	❍	❍	❍
9	Make-ip	❍	❍	❍	❍	❍	❍	❍	❍		✗	❍	❍	✗	❍	❍	❍
10	Line/Photo	❍	❍	❍	❍	❍	❍	❍	❍	✗		✗	❍	✗	❍	❍	❍
11	Line or Photo	❍	❍	❍	❍	❍	❍	❍	❍	❍	✗		❍	✗	❍	❍	❍
12	Image Density	❍	❍	❍	❍	❍	❍	❍	❍	❍	❍	❍		✗	❍	❍	❍
13	On-Line	✗	✗	✗	❍	★	✗	✗	✗	✗	✗	✗	✗		❍	❍	❍
14	Overlay	❍	❍	❍	❍	★	❍	❍	❍	❍	❍	❍	❍	❍		❍	❍
15	Sort	❍	❍	❍	❍	★	❍	❍	❍	❍	❍	❍	❍	❍	❍		❍
16	Economy	❍	❍	❍	❍	❍	❍	❍	❍	❍	❍	❍	❍	❍	❍	❍	

SECTION 3

INSTALLATION PROCEDURE

1. INSTALLATION REQUIREMENTS

The installation location should be carefully chosen because the environmental conditions greatly affect the performance of the machine.

1.1 OPTIMUM ENVIRONMENTAL CONDITIONS

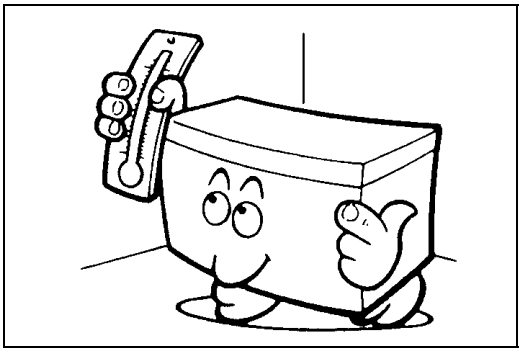

C223I518.img

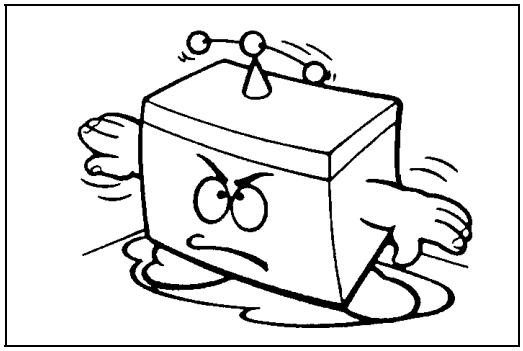

C223I519.img

Temperature —	10 to 30°C (50 to 86°F)	On a strong and level base.
Humidity —	20 to 90 % RH	The machine must be level within 5 mm (13/64") both front to rear and left to right.

1.2 ENVIRONMENTS TO AVOID

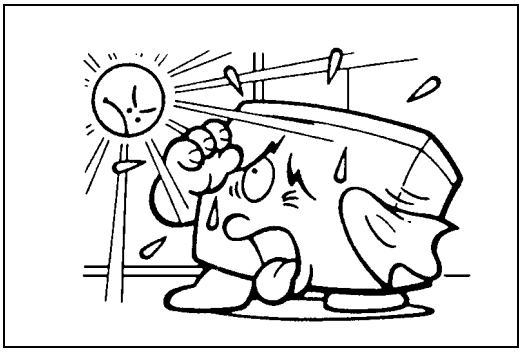

C223I520.img

Locations exposed to direct sunlight or strong light (more than 1,500 lux).

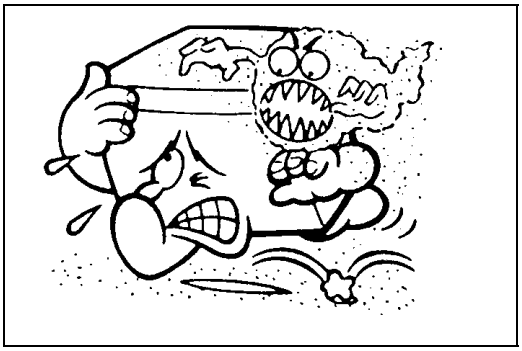

C223I521.img

Dusty areas.

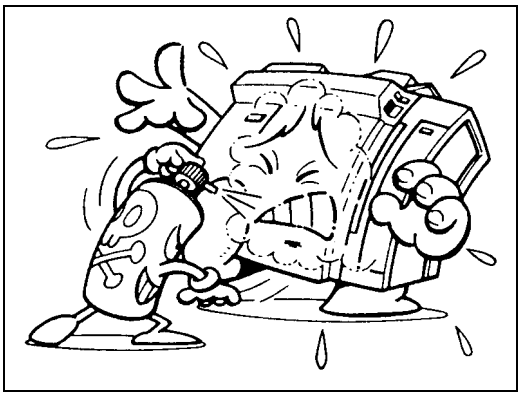

C223I523.img

Areas with corrosive gases.

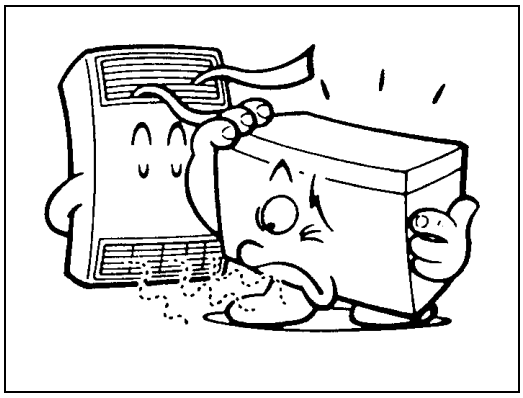

C223I525.img

Locations directly exposed to cool air from an air conditioner or reflected heat from a space heater. (Sudden temperature changes from low to high or vice versa may cause condensation within the machine.)

1.3 POWER CONNECTION

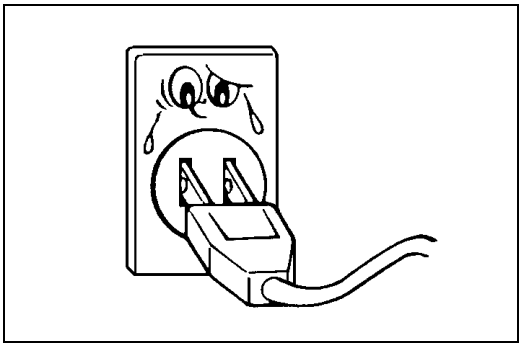

C223I524.img

Securely connect the power cord to a power source.

Make sure that the wall outlet is near the machine and easily accessible.

Make sure the plug is firmly inserted in the outlet.

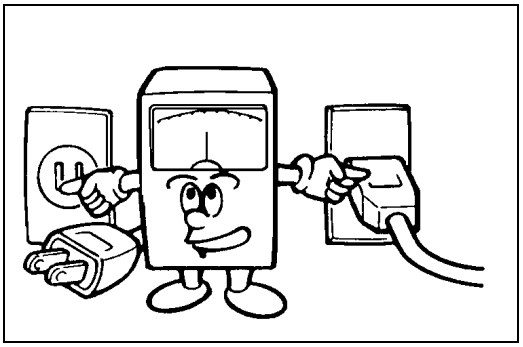

C223I516.img

Voltage must not fluctuate more than 10%.

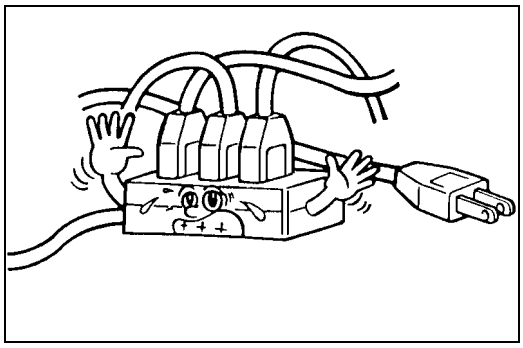

C223I515.img

Avoid multiwiring.

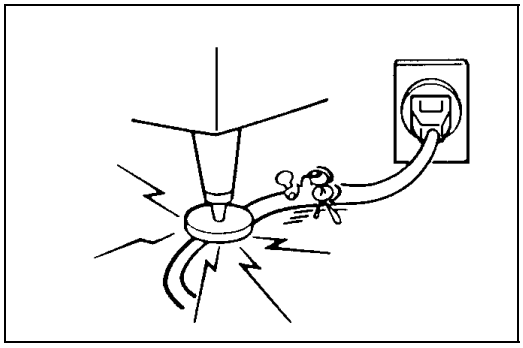

C223I517.img

Do not pinch the power cord.

1.4 ACCESS TO THE MACHINE

Place the machine near a power source, providing clearance as shown below.

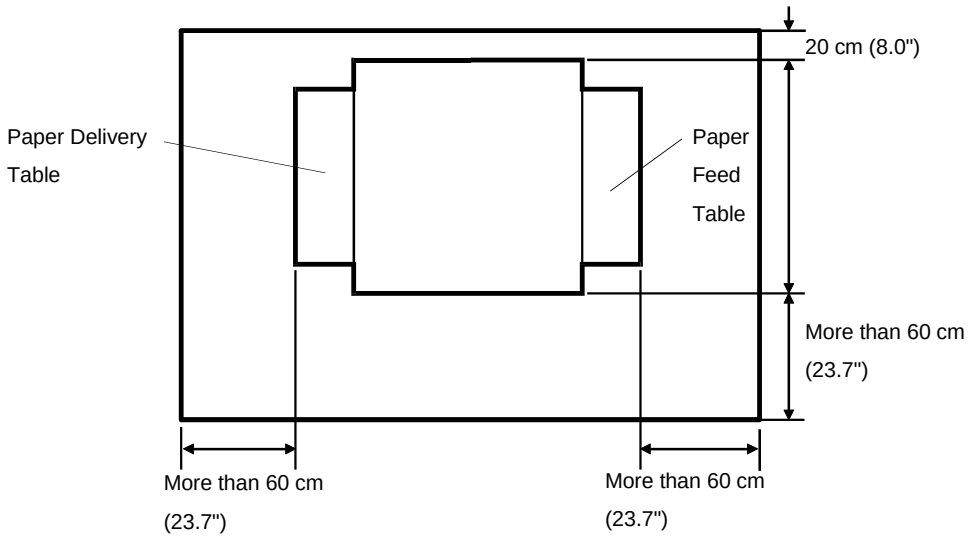

C223I526.wmf

2. ACCESSORY CHECK

Make sure that you have the following accessories.

1. Operating Instructions (except for -27 models)
2. NECR (–17, –27, –29 models only)
3. End Plate Prop
4. Decal - Mode
5. Decal - Key Top Cover (OEM machines only)
6. Model Name Plate (OEM machines only)
7. Decal - Master Set (–27 models only)

3. INSTALLATION PROCEDURE

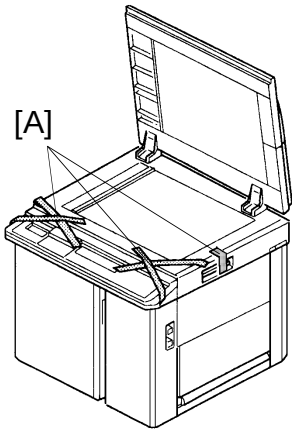

C223I500.img

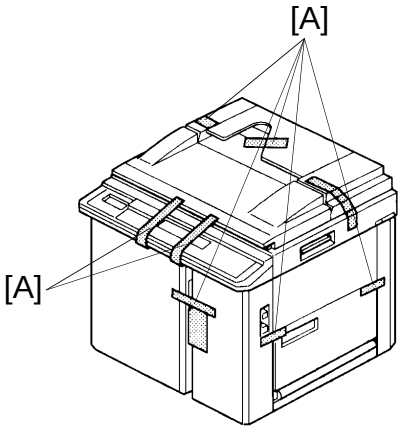

C223I501.img

⚠CAUTION

Do not hold the scanner unit when pushing the machine or the scanner unit safety switch may be damaged.

1. Place the machine on the table.

   NOTE: The screw holes in the bottom plate of the machine must line up with the screw holes in the table.

2. Remove the strips of tape [A] securing the covers and units shown above.

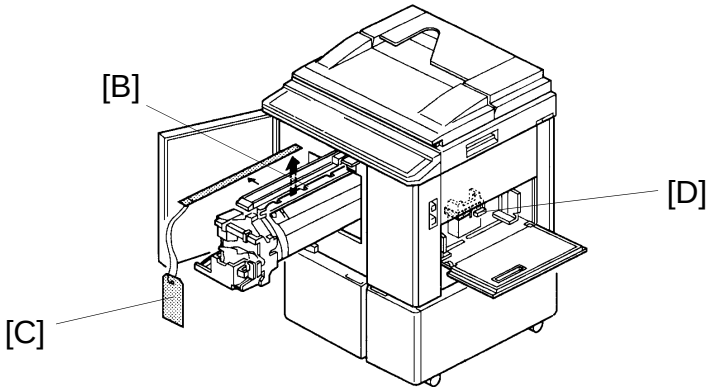

C223I502.img

3. Open the front door and slide out the drum unit [B].
4. Open the master clamper and remove the clamp [C].
5. Open the paper feed table and remove the cardboard cover [D] protecting the paper feed roller.
6. Slide the scanner unit to the left (as seen from the operation side) and remove the two strips of tape securing the master box.

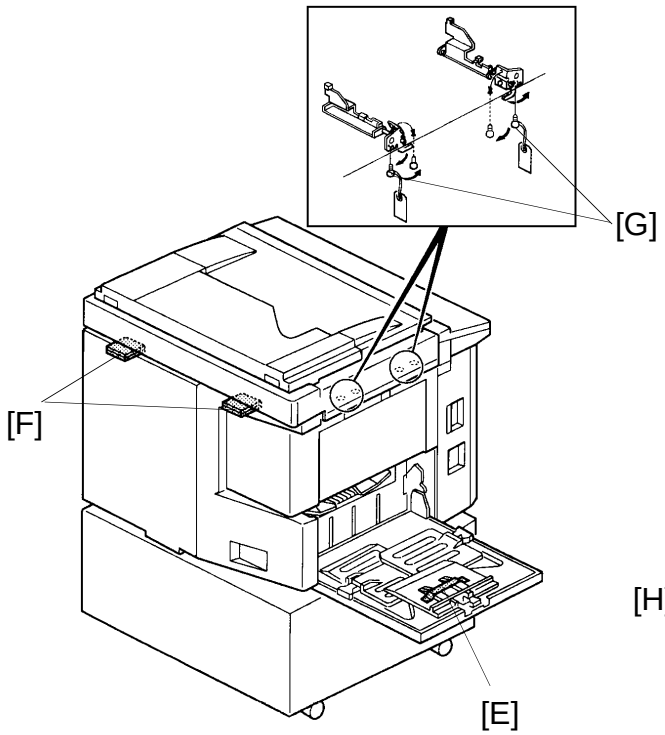

C223I503.img

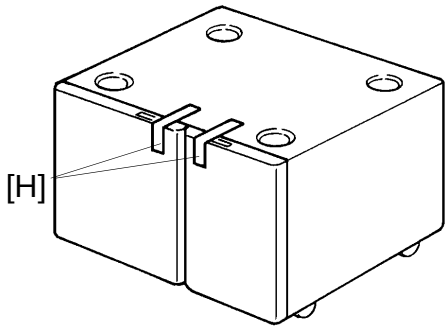

C223I504.img

7. Open the paper delivery table and remove the strip of tape [E] protecting the end fence.
8. Remove the cardboard [F] under the scanner unit.
9. Open the scanner unit and change the position of screws [G] from the transport position to the operating position.
10. Open the doors (2 strips of tape [H]) of the optional table and take out the plastic bag containing 2 screws.

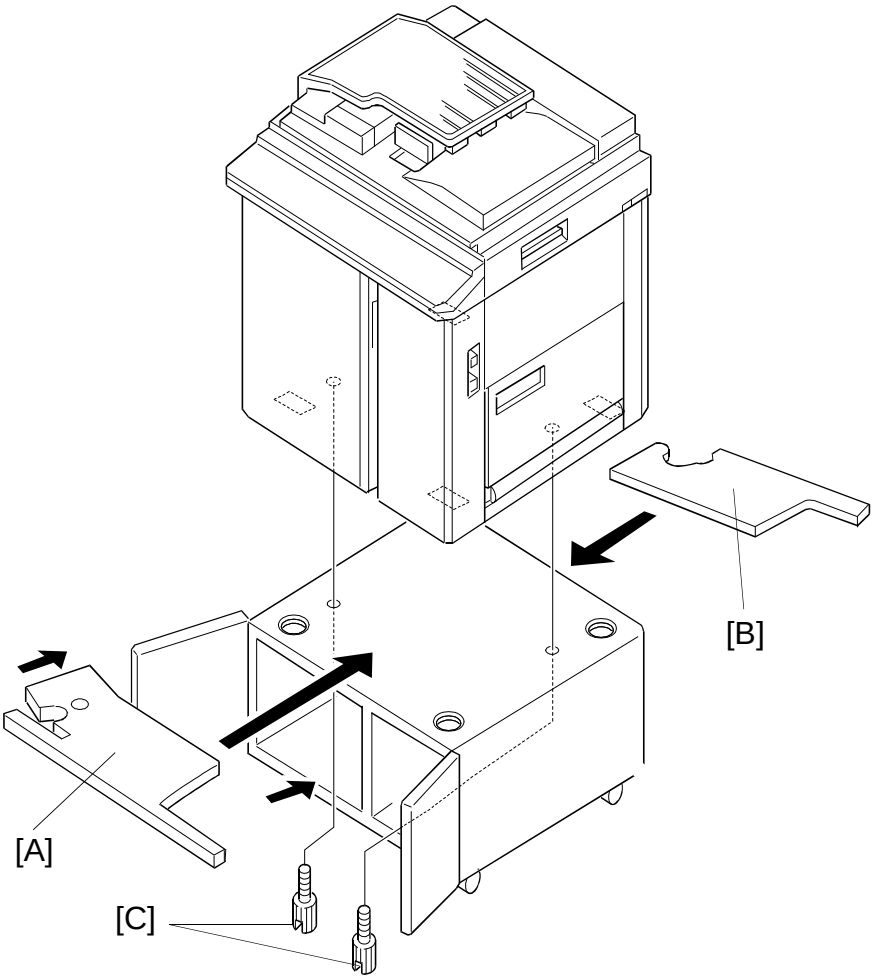

C223I505.wmf

11. Raise the front side of the machine and position the base pad [A] under the machine. Then raise the rear side of the machine and position the other base pad [B] under the machine.
12. Secure the machine to the table with the two screws [C] packed with the table.

13. Open the paper feed table [A] and neatly stack some printing paper on the table.
14. Slide the paper feed side plates [B] gently up against the paper stack.

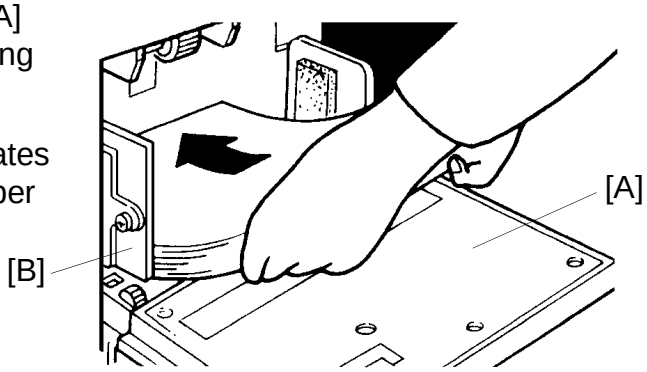

C223I506.img

15. Open the paper delivery table [C] and adjust the position of the end plate [D] and the side plates [E] to match the printing paper size. Refer to the paper size scale on the table.

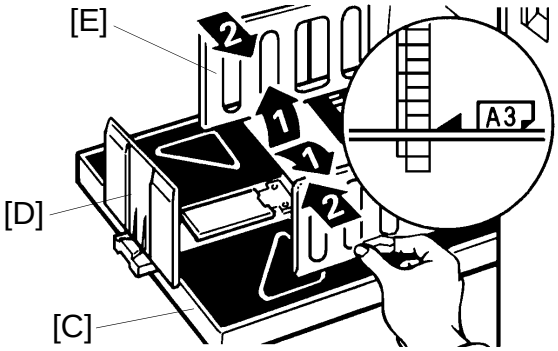

C223I507.img

16. Install the ink cartridge [F].
    a. Open the front door and lower the ink holder [G].
    b. Remove the ink cartridge cap.
    c. Insert the ink cartridge in the ink holder and raise the ink holder to the original position.
    d. Close the front door.

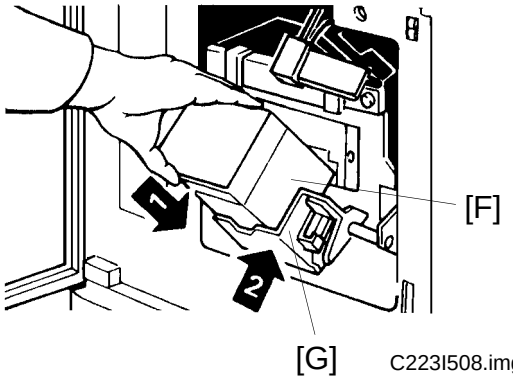

C223I508.img

17. Slide the scanner unit all the way to the left, and take the master spools [H] out.

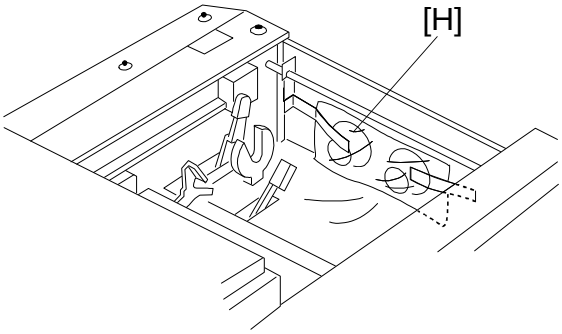

C223I514.wmf

Installation

18. Install the master roll.

    a. Attach a spool [A] to each end of the master roll [B].

    b. Push the pressure release lever [C] to the left.

    c. Set the master roll in the machine as shown in the illustration.

    d. Insert the leading edge of the master roll under the platen roller.

    e. Return the pressure release lever to the original position.

    f. Plug in the power cord and turn on the main switch.

    g. Press the master cut button.

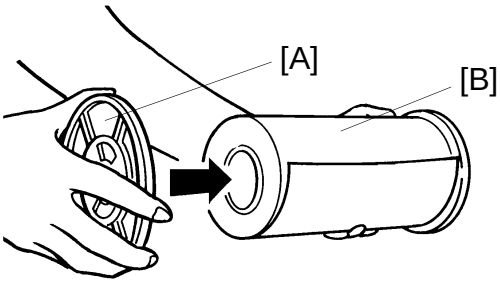

C223I510.img

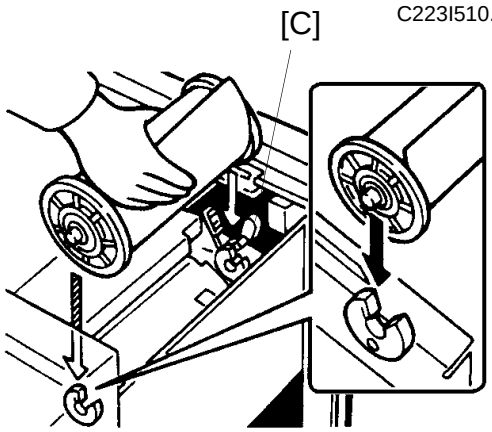

C223I511.img

    h. Open the master box cover and remove the cut strip of master paper.

    NOTE: Confirm that the paper on the master roll is not bent or creased.

    i. Close the scanner unit.

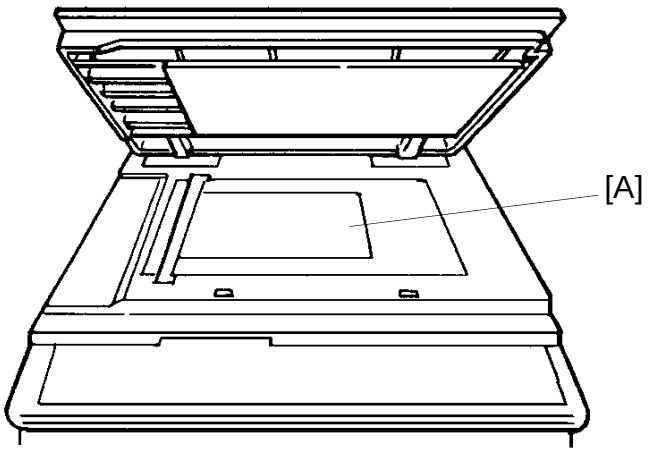

C223I512.img

19. Idle the machine to distribute ink on the drum.

    a. Press the Reset key while holding down the "0" key on the operation panel.

    b. If blinks on the operation panel when the machine stops, press the Reset key again.

20. Make some test prints to check the machine.

    a. Raise the platen cover and place an original face down on the exposure glass [A]. Make sure the original is flush with the left scale and aligned with the proper paper size marks.

    b. Press the Master Making key.

    c. Select the lowest print speed (1) with the Speed key and press the Print Start key. Make prints at this speed until the print image density stabilizes.

    NOTE: 1. Usually, about 30 prints need to be made before the image fully stabilizes.

    2. Check the image quality after the print image density is stabilized.

21. If necessary, change the language for the LCD guidance as follows:

    a. Turn the main switch off and unplug the machine.

    b. Remove the right front cover (4 screws).

    c. Change the DIP-SW 102-1, 2, 3 settings. The following table shows the setting for each language.

DPS102			**LCD Display**
1	**2**	**3**	
ON	ON	OFF	English (Default)
OFF	OFF	ON	German
ON	OFF	ON	French
OFF	ON	ON	Spanish
ON	ON	ON	Italian

    d. Reinstall the right front cover (4 screws).

4. MAKE-UP FUNCTION BOARD INSTALLATION PROCEDURE (OPTION)

1. Turn off the main switch and unplug the power cord.
2. Remove the right front cover (4 screws [A]).
3. Disconnect all the connectors on the main PCB.

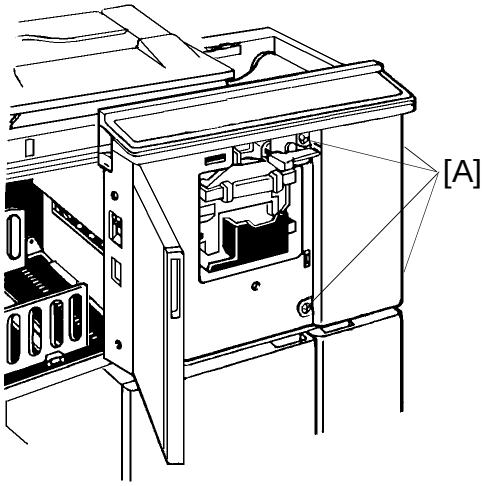

C569I300.img

4. Remove the main PCB (5 screws [B]) and Main Board Spacers.

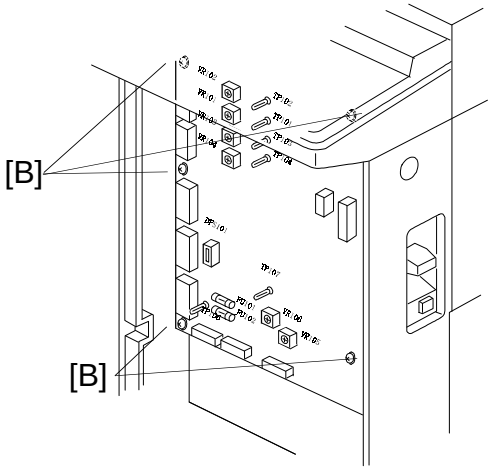

C569I501.img

5. Replace the Image Processing PCB with the optional Make-up Function board (4 screws [C]).
6. Reinstall the Main PCB and right front cover.
7. Plug in the power cord and turn on the machine. Make some test prints using the Image Make-up function.

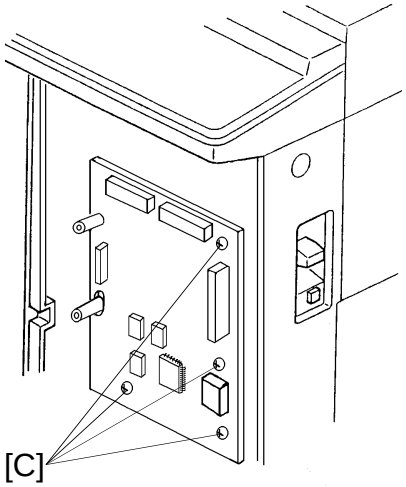

C569I302.wmf

SECTION 4

SERVICE TABLES

1. SERVICE REMARKS

1. If a circuit breaker or a fuse opens, check and remove the cause of the overcurrent before resetting the breaker or replacing the fuse.
2. If the thermal head or the power supply unit is replaced, thermal head voltage adjustment is required.
3. Do not touch the edge of the cutter blade with bare hands.
4. Be careful not to drop the master eject unit when removing the eject unit guide shaft.
5. If the paper feed guide plate is removed, make sure that the guide plates do not touch the lower second feed roller when putting back the guide.
6. When putting back the lower separation roller, make sure that the front and rear separation levers move smoothly.
7. If the slowest speed is faster than 60 rpm, the sorter cannot keep up with the machine and a TS sorter jam might occur.
8. Do not energize the master feed and master eject clamper solenoids for longer than 10 seconds.
9. When adjusting the ink roller gap, check the gap at the right, center, and left positions.
10. The ink detection adjustment should be made under normal conditions (20 C/65%RH).
11. When removing the pressure cam drive gear, do not loosen the two deeply recessed bolts.
12. If the main drive belt has been removed, check the relationships between the drum drive gear, printing pressure cam, and the paper feed cams after replacing the belt. Adjust if necessary.
13. Do not keep on pressing the Image Position key if the image position sensor is broken or removed. The plastic gears between the metal gears may break.

2. SERVICE TABLES

2.1 MAINTENANCE TABLES

2.1.1 Lubrication Points

Lubricate after removing adhering ink and paper dust at yearly intervals.

Section	Lubrication Point	Type	Location
Drive	Speed Reduction Gears of the Main Motor	Grease (Shell Albania No. 2)	(Fig.1- E)
	Gears of the Drum Drive Shaft		On the inside and outside of the frame (Fig.1- B)
Image Positioning	Spiral Track of the Cam Gear		(Fig.1- K)
Paper Feed	Paper Feed Sector Gear		(Fig.1- J)
	Second Feed Sector Gear		(Fig.1- F)
	Gear of the Paper Feed Cam Shaft		(Fig.1- A)
	Paper Table Slide Groove		Both front and rear (Fig.1- H)
	Paper Table Drive Gear		(Fig.1- G)
	Bearings for the Upper Separation Roller Shaft	Motor oil (SAE No. 20)	(Fig.1- I)
	Bearings for the Paper Feed Roller Shaft		(Fig.2- L)
Drum	Drum Drive Gear	Grease (Shell Albania No. 2)	(Fig.3- N)
	Master Clamper Sector Gear		(Fig.3- O)
	Master Clamper Pinion Gear		(Fig.3- P)
	Ink Pump Drive Gear		(Fig.3- M)
Printing Pressure	Between Printing Pressure Arm [Q] and Printing Pressure Stay [Q']		Both front and rear (Fig.4- Q)
	Pressure Spring Link		(Fig.1- C)
Master Eject	Master Pressure Plate Grooves	Grease (Shell Albania No. 2)	Both front and rear (Fig.5- S)
	Rounded Ends of the Master Pressure Plate Drive Arms		(Fig.5- R)
Paper Exit	Air Pump Drive Gears		(Fig. 6-T)
	Inside of the Air Pump Piston	Grease (Mobil Ep-1)	(Fig. 6-U)
ADF	Bearings for the Feed Roller Shaft	Motor oil (SAE No. 20)	Both front and rear (Fig. 7-V)
Others	Edge of Each Cam	Grease (Shell Albania No. 2)	(Fig.1- D)

[Fig 1]

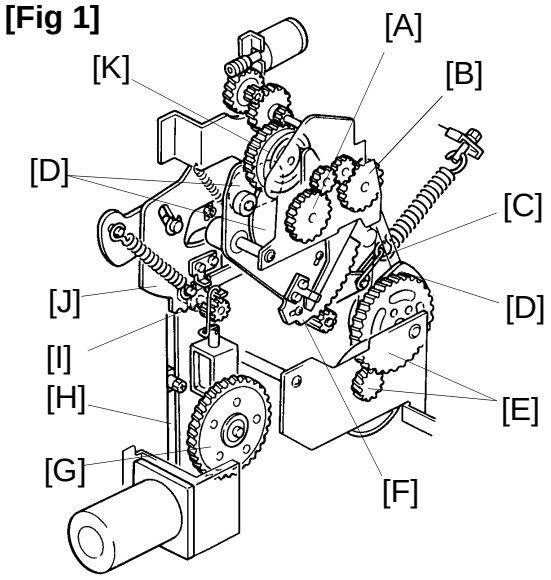

C223M500.img

[Fig 2]

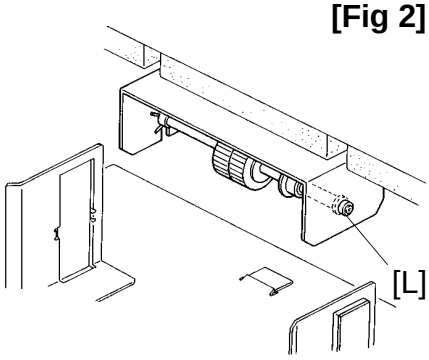

C223M501.img

[Fig 3]

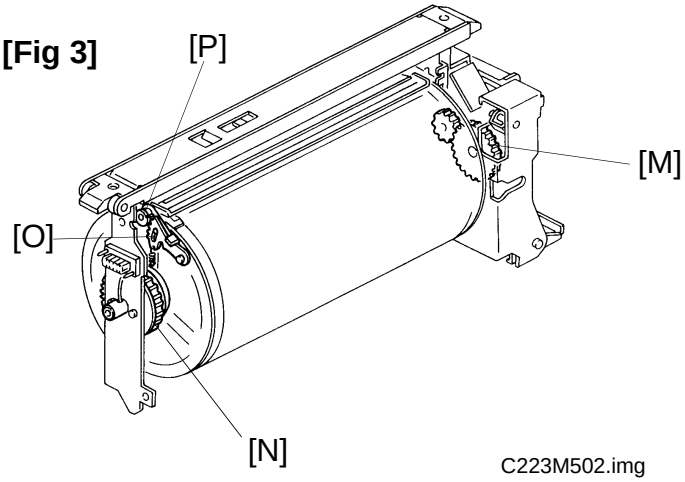

C223M502.img

Service Tables

[Fig 4]

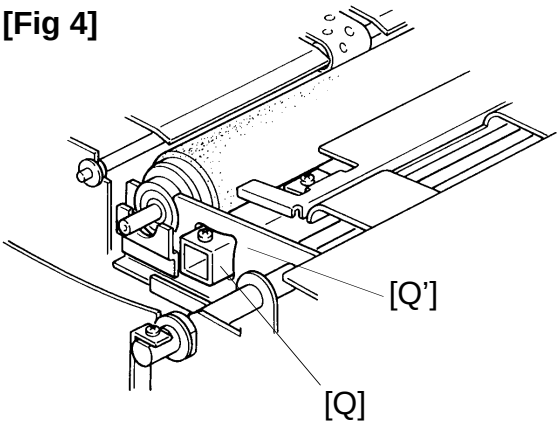

C223M503.img

[Fig 5]

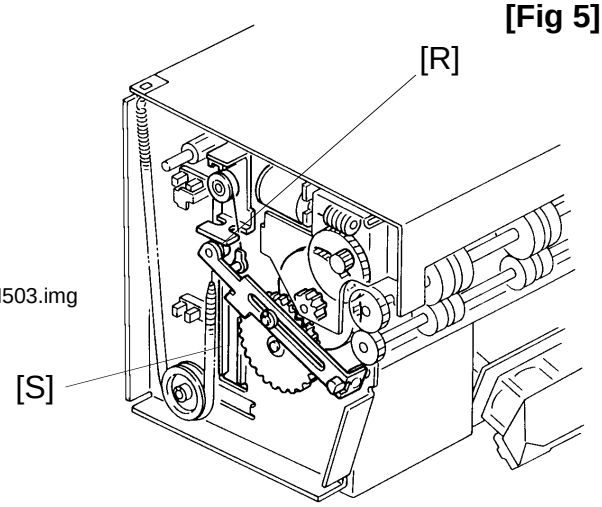

C223M504.img

[Fig 6]

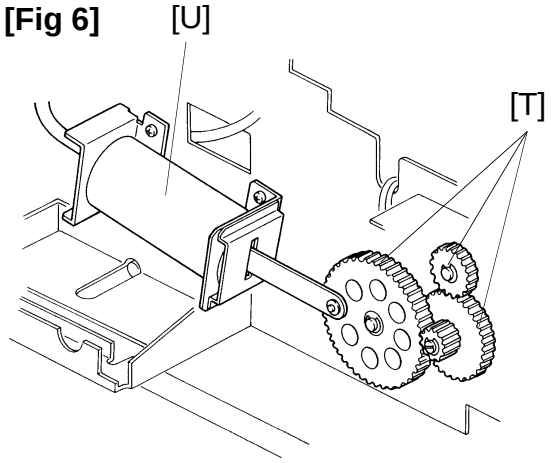

C223M509.img

[Fig 7]

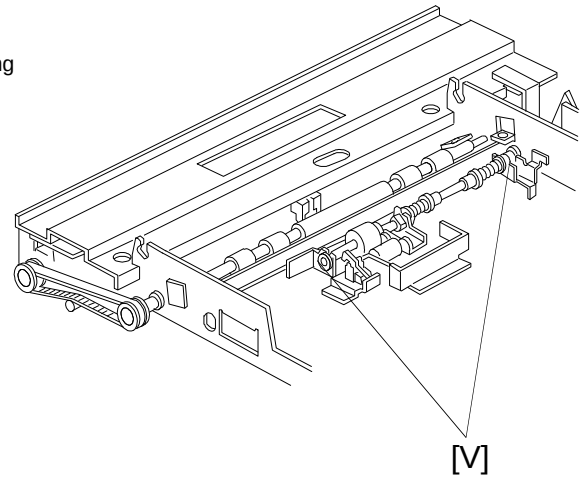

C223M510.wmf

2.1.2 User's Maintenance

Advise the customer to clean each item regularly. Clean the following items at every EM call if necessary.

Section	Cleaning Point	Cleaner	Interval
Optics	Original Platen Cover	Cloth and water	At every EM call
	Exposure Glass	Cloth and glass cleaner	
Paper Feed	Paper Feed Roller	Cloth and soap and water	
	Paper End Sensor	Dry cloth	
	Paper Length Sensor		
Printing	Press Roller	Cloth and soap and water	
ADF	Original Feed Rollers		

2.1.3 Periodic Inspection (every 6 months)

Section	Item	Standard Procedure
Optics	Original Platen Cover	Wipe off stains using a soft cloth moistened with ethyl alcohol.
	Exposure Glass	Wipe with a dry cloth.
Paper Feed	Paper Feed Roller	Wipe off ink and paper powder using a cloth moistened with ethyl alcohol.
	Upper and Lower Second Feed Rollers	
	Upper and Lower Separation Rollers	
Printing	Press Roller	
ADF	Pick-up Roller Feed Roller Separation Roller	Wipe off paper powder using a cloth moistened with water.

2.1.4 Periodic Inspection (every 12 months)

Section	Item	Standard Procedure
Optics	Back side of the Exposure Glass	Wipe with a dry cloth.
	Mirrors	Use a blower brush.
	Xenon Lamps	Wipe with a dry cloth.
Master Eject	Upper and Lower Master Eject Rollers	Wipe off ink and paper powder using a cloth moistened with ethyl alcohol.
	Master Eject Box	Wipe off ink using a cloth moistened with ethyl alcohol.
Drum	Inside and outside of the Drum	Wipe off built-up ink and paper powder using a cloth moistened with ethyl alcohol.
	Ink Holder	
Master Making	Platen Roller	Wipe off paper powder using a cloth moistened with water.
Others	First and Second Paper Exit Sensors Master Eject Sensor Drum Master Sensor	Check the performance of all the sensors. Remove stains from the sensors using a dry cloth.

2.2 SERVICE CALL CODES

Code	Problem	Possible Causes
Main Body		
E-01	Neither the right nor the left cutter switch turns off within 3 seconds of the cutter motor starting.	1) Drive wire cut 2) Drive section malfunction 3) Defective cutter switch
E-02	Malfunction in the paper table drive section. 1. The paper table lower limit sensor or paper table height sensor does not turn on within 7 seconds. 2. The LCT tray drive motor does not stop within 25 seconds. 3. The upper limit sensor does not turn or within 8 seconds after the LCT cassette bottom plate drive motor starts.	1) Drive worm gear broken 2) Mounting screw of the worm gear broken 3) No power supply
E-04	The temperature of the thermal head is greater than 54°C when the Master Making key is pressed.	1) Excessive thermal head temperature 2) Thermistor short
E-05	Malfunction in the image shifting section.	1) Image position sensor connector disconnected 2) Defective image position sensor
E-06	The drum rotation sensor detects an incorrect motor speed.	1) Drum lock 2) No power supply
E-09	The signal level between CN104-A1 and GND is over 4.9 volts.	1) The thermistor is open.
E-10	The CPU detects an abnormality in the pulse signals from the thermal head drive PCB. These pulses determine the energy to be applied to the thermal heating elements.	1) Defective thermistor 2) Related connectors are not connected (Thermal head drive PCB CN705 or CN701).
E-11	Encoder output does not change within 3 seconds of the main switch being turned on or the Clear Mode key being pressed.	1) Defective image position motor 2) No power supply

Code	Problem	Possible Causes
E-12	1. The upper or lower pressure plate sensor remains activated for more than 4 seconds after the pressure plate motor starts turning. 2. The lower pressure plate sensor is not activated within 8 seconds of the pressure plate motor starting to turn even though the upper pressure plate sensor is de-activated. 3. The upper pressure plate sensor is not activated for more than 8 seconds after the pressure plate motor starts to turn even though the lower pressure plate sensor is de-activated.	Pressure plate drive mechanism malfunction.
E-13	1. During scanner initialization: - The home position sensor remains activated for more than 4 seconds. - The home position sensor is not activated within 2 seconds. 2. The home position sensor is not activated within 7 seconds when the scanner returns after finishing making the master or scanning.	1) Defective home position sensor 2) Scanner motor lock
E-14	EMF sorter communication error.	
Sorters		
E-21	The 1st transport motor speed is abnormal.	1) Defective 1st transport motor 2) Defective 1st transport motor rotation sensor.
E-26	The 1st sorter helical wheel H.P. sensor status does not change even if the bin shift motor drive signal is applied. The bin shift motor rotation sensor status does not change even if the bin shift motor drive signal is applied.	1) Defective bin shift motor 2) Defective helical wheel H.P. sensor 3) Defective bin shift motor rotation sensor
E-27	The 1st sorter jogger bar H.P. sensor status does not change even if the jogger bar motor drive signal is applied.	1) Defective jogger bar motor 2) Defective jogger bar H.P. sensor

Code	Problem	Possible Causes
E-28	The 1st sorter staple position switch or staple unit movement switch status does not change even if the staple unit shift motor drive signal is applied.	1) Defective staple unit shift motor 2) Defective jogger bar H.P. sensor 3) Defective staple unit movement switch
E-29	The 1st transport sort mode position sensor or the 1st transport non-sort mode position sensor status does not change even if the delivery table motor drive signal is applied.	1) Defective 1st transport sort mode position sensor 2) Defective 1st transport non-sort position sensor 3) Defective delivery table motor
E-34	The 2nd transport motor rotation sensor speed is abnormal.	1) Defective 2nd transport motor 2) Defective 2nd transport motor rotation sensor
E-36	The 2nd sorter helical wheel H.P. sensor status does not change even if the bin shift motor drive signal is applied. The bin shift motor rotation sensor status does not change even if the bin shift motor drive signal is applied.	1) Defective bin shift motor 2) Defective helical wheel H.P. sensor 3) Defective bin shift motor rotation sensor
E-37	The 2nd sorter jogger bar H.P. sensor status does not change even if the jogger bar motor drive signal is applied.	1) Defective jogger bar motor 2) Defective jogger bar H.P. sensor
E-38	The 2nd sorter staple position sensor or staple unit movement sensor status does not change even if the staple unit shift motor drive signal is applied.	1) Defective staple unit shift motor 2) Defective jogger bar H.P. sensor 3) Defective staple unit movement switch

2.3 DIP SWITCHES, LEDs, VRs, TPs (ON THE MAIN CONTROL PCB)

2.3.1 DIP Switches

DIP Switch	Function	Remarks
DIP SW101	Do not use.	Must be off at all times.

DPS 102			LCD Display
1	2	3	
ON	ON	OFF	English
OFF	OFF	ON	German
ON	OFF	ON	French
OFF	ON	ON	Spanish
ON	ON	ON	Italian
OFF	OFF	OFF	For Japanese Machines
ON	OFF	OFF	
OFF	ON	OFF	

DPS 102	ON	OFF
4	DFII (Type 50) Also see SP8.	DFI
5	Print and master counters increment by two counts when the A3 drum is used (NRG setting). Also, see SP86.	Print and master counters increment by one regardless of the drum size.
6	Inch version	A4 version

NOTE: The DF setting can be changed using SP8. When the memory clear (SP60) is performed, the SP8 setting depends on the DPS102-4 setting. Later, if the SP mode is changed but not the DPS, the SP mode setting takes priority. This note also applies to DPS 102-5.

2.3.2 Photodiodes

LED	Component	Remarks
LED101	1st Paper Exit Sensor	When paper is detected, the LED lights.
LED102	Drum Master Sensor	When a master is on the drum, the LED lights.
LED103	2nd Paper Exit Sensor	When paper is detected, the LED lights.
LED104	Master Eject Sensor	When a master is under the master eject sensor, the LED lights.
LED105	Ink Detection	When ink is present, the LED lights.
LED106	Main Motor	When the main motor turns on, the LED lights.

2.3.3 VRs

VR	Function
VR101	1st Paper Exit Sensor Adjustment
VR102	Drum Master Sensor Adjustment
VR103	2nd Paper Exit Sensor Adjustment
VR104	Master Eject Sensor Adjustment
VR105	Adjustment for Drum Speed 5 (120 rpm)
VR106	Adjustment for Drum Speed 1 (60 rpm)

2.3.4 TPs

TP	Function
TP101	1st Paper Exit Sensor Voltage
TP102	Drum Master Sensor Voltage
TP103	2nd Paper Exit Sensor Voltage
TP104	Master Eject Sensor Voltage
TP105	Ink Detection Voltage
TP106	Drum Rotation Sensor Voltage
TP107	GND

2.4 EXPECTED LIFE OF PARTS

Section	Part Description	Expected Life
Scanner	Xenon Lamp	15,000 originals
Master Feed/Master Making	Thermal Head	30,000 masters
	Reverse Roller	30,000 masters
	Platen Roller	30,000 masters
	Upper Master Feed Roller	1 year or 30,000 masters
Drum	Drum Cloth Screen	2 years or 1,200,000 prints
Paper Feed	Paper Feed Rubber Side Plate	2 years or 1,200,000 prints
	Paper Feed Roller	6 months or 300,000 prints
	Upper Separation Roller	1 year or 600,000 prints
	Lower Separation Roller	2,000,000 prints
	2nd Feed Roller Brake Belt	1,000,000 prints
	2nd Feed Roller Gear	1,000,000 prints
	Separation Plate	1 year or 600,000 prints
Printing	Press Roller	2 years or 1,200,000 prints
Delivery	Transport Belt	2 years or 1,200,000 prints

2.5 SPECIAL TOOLS

Description	Part Number
Test Chart R-21	99992131
Resolution Chart	A0129110
Drum Gauge	C2009001
Image Shifting Gauge	C2009002

3. SERVICE PROGRAM MODE

3.1 SERVICE PROGRAM MODE OPERATION

The service program (SP) mode is used to check electrical data, change modes, or change adjustment values.

3.1.1 Service Program Mode Access Procedure (for engineers)

All service program modes can be accessed with this procedure.

1. Press the following keys on the operation panel in the following order:
   Case 1:
   a) Clear Modes key
   b) Clear key
   c) Combine 2 Originals key
   d) Enter key

   Case 2:
   a) Turn off the power switch
   b) Press the Enter key, Stop key, and Clear key simultaneously
   c) Turn on the power
2. The following is displayed on the LCD when the SP mode is accessed.

```
SP–MODE
  PROGRAM No.      0
```

3. Using the number keys, enter the desired SP mode number (listed in the service program table.)

   NOTE: The SP mode number can be shifted up or down by pressing the Zoom key ("+" or "–").

4. To cancel the SP mode, press the Clear Modes key.

3.1.2 Service Program Mode Access Procedure (for users)

This procedure allows users to access only the service program modes that are marked with an asterisk in the service program table.

1. Press the following keys on the operation panel in the following order:
   a) Clear Modes key
   b) Clear key
   c) Enter key
2. The following is displayed on the LCD when the SP mode is accessed.

```
SP–MODE
 PROGRAM No.      0
```

3. Using the number keys, enter the desired SP mode number (listed in the service program table).
4. To cancel the SP mode, press the Clear Modes key.

3.1.3 Change Adjustment Values or Modes

1. After entering the desired SP mode number, press the Enter key. The current value or mode will be displayed on the LCD (at the end of the second line).
2. Enter the desired value or mode using the number keys (listed in the service program table).
   Use the Memory/Class key to toggle between + and –.
3. Press the Enter key to store the desired value or mode.
4. To cancel the SP mode, press the Clear Modes key.

3.2 SERVICE PROGRAM TABLE

*: Accessible by a customer **: Can be registered in CS mode
♥: A4 version ♦: LT version

No.	Display	Function	Data	Factory Setting	Comments
1	On line	Enables On Line key operation.	0: No 1: Yes	0	
2	FDC Type 10	Used only in Japan	0: No 1: Yes	0	Keep at 0.
3	Key Counter	Enables key counter operation.	0: No 1: Yes	0	
4	Key Card	Used only in Japan.	0: No 1: Yes	0	
5	EMF Sorter	Selects the number of sorters.	0: No sorters 1, 2, 3, 4, or 5: Sorters present	0	Input 1 to 5 to indicate the number of sorters.
7-1	DS/TS Sorter	Enables TS20A/B operation.	0: No 1: Yes	0	If "1" is selected in 7-1, the machine goes to Auto Reset Time setting mode.
7-2	Auto Reset Time	Specifies the auto reset time.	0: No 1-5: min.	0	
8	ADF Select	Informs the machine if DF Unit Type 50 is installed.	0: DF1 (or no DF) 1: DF2 (type 50)	0	
*10.	Min. Print	Limits the minimum print quantity that can be entered.	0 to 9999	0	
*11	Max. Print	Limits the maximum print quantity that can be entered.	0 to 9999	9999	
*12	♥: A4 → A3 Mag. Ratio ♦: HLT → LG Mag. Ratio	Adjusts the fixed magnification ratio. ♥: From A4 to A3 ♦: From 5 1/2" x 8 1/2" to 8 1/2" x 14"	50 to 200%	♥: 141% ♦: 155%	
*13	♥: A4 → B4 Mag. Ratio ♦: LT → DLT Mag. Ratio	Adjusts the fixed magnification ratio. ♥: From A4 to B4 ♦: From 5 1/2" x 8 1/2" to 11" x 17"	50 to 200%	♥: 122% ♦: 129%	

Service Tables

No.	Display	Function	Data	Factory Setting	Comments
*14	♥: B4 → A3 Mag. Ratio ♦: LG → DLT Mag. Ratio	Adjusts the fixed magnification ratio. ♥: From B4 to A3 ♦: From 8 1/2" x 14" to 11" x 17"	50 to 200%	♥: 115% ♦: 121%	
*15	Full Size	Adjusts the full size magnification ratio.	50 to 200%	100%	
*16	Page Margin	Adjusts the create margin magnification ratio.	50 to 200%	93%	
*17	♥: A3 → B4 Mag. Ratio ♦: LG → LT Mag. Ratio	Adjusts the fixed magnification ratio. ♥: From A3 to B4 ♦: From 8 1/2" x 14" to 8 1/2" x 11"	50 to 200%	♥: 87% ♦: 77%	
*18	♥: B4 → A4 Mag. Ratio ♦: ** → LT Mag. Ratio	Adjusts the fixed magnification ratio. ♥: From B4 to A4 ♦: From 11" x 15" to 8 1/2" x 11"	50 to 200%	♥: 82% ♦: 74%	
*19	♥: A3 → A4 Mag. Ratio ♦: DLT → LT Mag. Ratio	Adjusts the fixed magnification ratio. ♥: From A3 to A4 ♦: From 11" x 17" to 8 1/2" x 11"	50 to 200%	♥: 71% ♦: 65%	
*20	Buzzer On	Turns the beeper ON or OFF	0: No 1: Yes	0	
*21	Prints/Master Cost	Adjusts the cost ratio of masters to prints for accounting purposes.	0 to 50	0	The set number (0 to 50) is automatically added to the key counter each time a master is used.
22	Read Image Area	Not used	—	0	Not used
*23	Online Paper Size	Used only in Japan	0: A6 1: A5	0	Not used
25	Sorter Feed Speed	Determines the transport belt speed in the TS sorter.	0: -20% 6: +15% 1: -15% 7: +20% 2: -10% 8: +25% 3: -5% 9: +30% 4: +5% 10: 0% 5: +10%	10	
26-1	Sorter Priority	Determines the sorter priority.	0: Normal 1: Others	0	

No.	Display	Function	Data	Factory Setting	Comments
26-2	0: 1st/2nd 1: 2nd/1st 2. 1st 3. 2nd	Determines the sorter priority when "1" is selected in SP26-1.	0: 1st sorter first 1: 2nd sorter first 2: 1st sorter only 3: 2nd sorter only	0	If "2" or "3" is selected, only one sorter is used.
27	Auto Staple Off	Specifies whether the staple unit is disabled.	0: Staple mode enabled. 1: Staple mode disabled.	0	
28	Max. Print/Bin	Specifies the sort/stack number limit.	1 to 50 sheets	50	
**29	Pht Bckgrnd Correct	Determines whether the original background correction is done in Photo mode.	0: Correction is not done. 1: Correction is done.	0	
30	Sub Scan Mag. Adjust	Adjusts the sub-scan magnification.	–1.9 to +1.9%	(0)	The factory setting depends on the machine.
31	MTF Level	Adjusts the MTF level.	0: Low 1: Standard 2: High 3: Maximum	1	
32	Image Density Rank	In line mode, adjusts the image density level.	0: Light 1: Standard 2: Dark	1	
33	Lead Edge Margin	Adjusts the lead edge margin.	4 to 10 mm	5 mm	
34	Line/Pht Mode Level	Use to adjust the threshold level for separating line areas and photo areas in the Line/Photo mode.	0: Change the threshold setting 1: Returns the setting to default	0	If "0" is selected in this mode, the machine goes to 34-1.
34-1	Contrast	Select the contrast setting for changing the threshold for line and photo.	0: Standard 1: Light 2: Dark		Depending on the number selected in this mode, the machine goes to 34-1-0, 34-1-2, or 34-1-3.

No.	Display	Function	Data	Factory Setting	Comments
34-1-0	Std (setting for the Standard tone)	Adjust the threshold level to distinguish line and photo areas for the Standard tone setting in the Line/Photo mode. There are four numbers and each represents the threshold value for an image density. Input the required value for the one that is blinking, then press Enter to move the next one.	Lt: 0 to 63 Std: 0 to 63 Dk: 0 to 63 Dkr: 0 to 63	Lt: 18 Std: 16 Dk: 22 Dkr: 22	If "0" is selected in 34-1, the machine goes to this mode.
34-1-1	Lt (setting for the Light tone)	Adjust the threshold level to distinguish line and photo areas for the Light tone setting in the Line/Photo mode.	Lt: 0 to 63 Std: 0 to 63 Dk: 0 to 63 Dkr: 0 to 63	Lt: 16 Std: 14 Dk: 14 Dkr: 14	
34-1-2	Dk (setting for the Dark tone)	Adjust the threshold level to distinguish line and photo areas for the Dark tone setting in the Line/Photo mode.	Lt: 0 to 63 Std: 0 to 63 Dk: 0 to 63 Dkr: 0 to 63	Lt: 8 Std: 10 Dk: 14 Dkr: 14	
35	Head Energy Adjust	Selects normal mode or Economy mode for changing the thermal head energy.	0: Normal mode 1: Economy mode		Depending on the number selected in this mode, the machine goes to 35-1 or 35-2.
35-1	Head Energy Adjust (Normal)	Adjusts the thermal head energy for the normal mode.	0 to -99 (%)	7	
35-2	Head Energy Adjust (Economy)	Adjusts the thermal head energy for the Economy mode.	0 to -99 (%)	35	
36	Sub Scan Mag. Adjust (ADF)	Adjusts the ADF sub-scan magnification.	-1.9 to 1.9 %	0	0.1 % steps
37	Shadow Erase Level	Selects the image mode for adjusting the threshold level for shadow erase.	0: Line 1: Photo 2: Returns the settings to the defaults		If "0" or "1" is selected in this mode, the machine goes to 37-0 or 37-1.

No.	Display	Function	Data	Factory Setting	Comments
37-0	Line	Adjusts the shadow erase threshold level for Line mode. There are four numbers and each represents the threshold value for an image density. Input the required value for the one that is blinking, then press Enter to move the next one.	Lt: 0 to 63 Std: 0 to 63 Dk: 0 to 63 Dkr: 0 to 63	Lt: 27 Std: 19 Dk: 15 Dkr: 10	
37-1	Contrast (Photo)	Selects the contrast setting for adjusting the threshold level for shadow erase in Photo mode.	0: Standard 1: Light 2:Dark		Depending on the number selected in this mode, the machine goes to 37-1-0, 37-1-1 or 37-1-2.
37-1-0	Std (setting for the normal tone)	Adjusts the shadow erase threshold for the Normal contrast setting in Photo mode. There are four numbers and each represents the threshold value for an image density. Input the required value for the one that is blinking, then press Enter to move the next one.	Lt: 0 to 63 Std: 0 to 63 Dk: 0 to 63 Dkr: 0 to 63	Lt: 24 Std: 15 Dk: 11 Dkr: 4	
37-1-1	Lt (setting for the light tone)	Adjusts the shadow erase threshold for the Light Tone contrast setting in Photo mode.	Lt: 0 to 63 Std: 0 to 63 Dk: 0 to 63 Dkr: 0 to 63	Lt: 31 Std: 24 Dk: 15 Dkr: 9	
37-1-2	Dk (setting for the dark tone)	Adjusts the threshold value for shadow erase of the Dark tone contrast in Photo mode.	Lt: 0 to 63 Std: 0 to 63 Dk: 0 to 63 Dkr: 0 to 63	Lt: 12 Std: 7 Dk: 5 Dkr: 2	
38	ADF Scan Line Adjust	Adjusts the ADF scanning start position.	-4.9 to 4.9 mm	0	0.1 mm steps See remarks (1).
39	Image Center Adjustment	Adjusts the center position of copies in the ADF and platen modes.	0: Scanner 1: ADF	0	See remarks (2).

Service Tables

No.	Display	Function	Data	Factory Setting	Comments
39-0	Image Center Adjustment: Scanner	Adjusts the center position of copies in platen mode.	-4.9 to 4.9 mm	0	0.1 mm steps
39-1	Image Center Adjustment: ADF	Adjusts the center position of copies in ADF mode.	-4.9 to 4.9 mm	0	0.1 mm steps
*40	Original	Specifies the image mode at power-up.	0: Photo 1: Line 2: Line/Photo	1	
*41	Image Density	Specifies the image density at power-up.	0: Light 1: Standard 2: Dark 3: Darker	1	
42	Print Speed	Specifies the printing speed at power-up.	0: 60 rpm 1: 75 rpm 2: 90 rpm 3: 105 rpm 4: 120 rpm	2	
*43	Auto Cycle Mode	Specifies whether Auto Cycle mode is selected at power-up.	0: No 1: Yes	0	
*44	Memory/Class Mode	Specifies the initial job memory feature (Memory or Class mode) at power-up.	0: Class 1: Memory	1	
45	Std. Image Position	Specifies the image position at power-up	1: +15 mm 2: +10 mm 3: +5 mm 4: 0 mm 5: –5 mm 6: –10 mm 7: –15 mm 8: –20 mm	4	
*46	Make Up	Specifies the initial make-up background pattern when the Image Make-up mode is selected.	1 to 40 51 to 90 101 to 140 151 to 190	0	0: No background pattern is selected.
47	Contrast	Specifies the initial contrast when the Photo mode is selected.	0: Standard 1: Light 2: Dark	0	
48	Photo	Specifies the initial screen when the Photo mode is selected.	0: Standard 1: Fine 2: Coarse	0	

No.	Display	Function	Data	Factory Setting	Comments
*50	Directional Mag. Mode	Selects which is used to input directional magnifications: reproduction ratios or vertical and horizontal lengths.	0: Reproduction ratios 1: Vertical and horizontal lengths	0	
60	Clear All Memory	Returns all SP modes to the default settings.	0: No 1: Yes	0	
61	Clear Memory / Except SP 30, 36, 38, 39	Returns all SP modes to the default settings except for SP No. 30, 36, 38 and 39	0: No 1: Yes	0	
70	Original Feed Jam (A)	Displays the total number of original jams.		0	
71	Paper Feed Jam (B)	Displays the total number of paper feed jams.		0	
72	Paper Wrap Jam (E)/(B)(E)	Displays the total number of times that paper has accidentally wrapped around the drum.		0	
73	Paper Delivery Jam (G)	Displays the total number of paper delivery jams.		0	
74	Master Feed Jam (C)	Displays the total number of master feed jams.		0	
75	Master Delivery Jam (F)	Displays the total number of master delivery jams.		0	
76	Clear Jam Counters	Clears all jam counters.	0: No 1: Yes	0	
77	Last Sorter Jam	Displays the jam code for the last sorter jam.			
**79	Eco/Quality Start	Specifies if Quality Start operation is done for every master making.	0: No 1: Yes	0	If "1" is selected in 79, the machine goes to 79-1.
79-1	Idling Number	Specifies the number of drum rotations for Quality Start.	0 to 10	2	If "0" is selected in SP79, the number of rotations is determined by SP80.

No.	Display	Function	Data	Factory Setting	Comments
*80	Auto Eco/Q Start	Specifies whether Quality Start is done or not. If "Yes" is selected, the machine goes to "Idling No." mode. The idling number can be selected separately corresponding to the machine off time; 0 to 6 hours, 6 to 32 hours, and more than 32 hours.	0: No 1: Yes	1	If "1" is selected in 80, the machine goes to 80-1.
80-1-1	Idling Number (after a 0 to 6 hour interval)	Specifies the drum rotation number for the machine off time 0 to 6 hours.	0 to 10	0	If Enter key is pressed in this mode, the machine goes to 80-1-2.
80-1-2	Idling Number (after a 6 to 32 hour interval)	Specifies the drum rotation number for when the machine was off from 6 to 32 hours.	0 to 10	2	If Enter key is pressed in this mode, the machine goes to 80-1-3.
80-1-3	Idling Number (after an intermal of more than 32 hours)	Specifies the drum rotation number for when the machine was off from more than 32 hours.	0 to 10	3	
81	Proof Print No.	Specifies how many trial prints are made after making the master.	0 to 2 sheets	1	
*82-1	Skip Feed No.	Selects the feed interval.	1 to 9	2	1: Normal operation 2 to 9: One sheet fed every two to nine drum rotations
-2	Long Sheet ?	Specifies whether a long sheet is used. (If "Yes" is selected, paper exit jam detection is not done.)	0: No 1: Yes	0	Displays only when no. 2 to 9 are selected in 82-1.
*83	Auto Reset Time	Specifies the auto reset time.	0: No 1 to 5 min.	0	

No.	Display	Function	Data	Factory Setting	Comments
**84	Auto Multi-copy	Specifies the initial mode for Multi copy.	0: Normal 1: Auto (Two or four identical images are made if the Master Making key is pressed once.)	0	
85	Initial Com-pression	Specifies whether full master box detection is made at power-up.	0: No 1: Yes	0	
86	A3 Drum 2 Count Up	Specifies whether the counter increments by two counts per print when the A3 drum is used.	0: No 1: Only the master counter 2: Both the master and the copy counter	0 Ricoh, AB Dick 2 NRG	See Remarks (3)
**87	Memory Print	Specifies the printing operation when in Memory mode.	0: Memory 1: Stack	0	See Remarks (4).
**88	Auto Memory/ Class	Specifies whether Auto Memory/Class mode is used.	0: No 1: Yes	1	See Remarks (5).
**89	Gray/Tint Mode	Select "Yes" to make a "Tint" image. (If "Tint" mode is selected, the Screen, Contrast, and Image Density keys are not available.)	0: No 1: Yes	0	
90	Thermal Head Test	Selects the background pattern for the copy made in the thermal head test; performs the test.	1 to 40 51 to 90 101 to 140 151 to 190	7	See the Thermal Head Test section.
91	Command Sheet Check	Prints the command sheet image (designated area) together with the original image.	0: No 1: Yes	0	See the Command Sheet Check section.
92	Thermal Paper Mode	Use this mode to test the thermal head.	0: No 1: Yes	0	See Remarks (6)
93	Erase Area Check	Checks the erase area.	0: No 1: Yes	0	See Remarks (7)
95 -1	Scanner Free Run	Selects the type of scanner free run.	0: With the lamp off 1: With the lamp on	0	See Remarks (8)

Service Tables

No.	Display	Function	Data	Factory Setting	Comments
-2	Scanner Free Run	Carries out the scanner free run. (The speed can be changed: see Remarks (8).)	Start with the Print Start key. Stop with the Stop key.		Displays when pressing # after selecting 0 or 1 in 95-1.
96	ADF Original Feed Check	Carries out the ADF original feed check. (The speed can be changed; see Remarks (9).)	Start with the Print Start key. Stop with the Stop key.		See Remarks (9)
98	Economy Count	Displays the total number of masters made in Economy mode.		0	
99	Staple Count	Displays the total number of stapling operations done so far.		0	
100	Multi-copy Count	Displays the total number of masters made in Multi-copy mode.		0	
101	Make Up Count	Displays the total number of masters made in Make-up mode.		0	
102	Make Up Photo Count	Displays the total number of masters made in Make-up Photo mode.		0	
103	Margin Erase Count	Displays the total number of masters made with the Margin Erase key.		0	
104	On line Count	Displays the total number of masters made in On Line mode.		0	
105	Overlay Count	Displays the total number of masters made in Overlay mode.		0	
106	Enlarge Count	Displays the total number of masters made in Fixed Enlargement mode.		0	
107	Reduction Count	Displays the total number of masters made in Fixed Reduction mode.		0	

No.	Display	Function	Data	Factory Setting	Comments
108	Zoom Count	Displays the total number of masters made in Zoom mode.		0	
109	Directional Mag.	Displays the total number of masters made in Directional Magnification mode.		0	
110	Power On Time	Displays the total amount of time the machine has been turned on.		0	xxxxx Hour xx Minutes xx Seconds
111	Total Count	Displays the total number of masters and prints.		0	M: Master count P: Print count
*113	Resettable Count	Used by the customer to display the total number of masters and prints.		0	M: Master count P: Print count
*114	CLR Reset-table Count	Clears the resettable total master/print counters.	0: No 1: Yes	0	
115	ADF Mode Count	Displays the total number of sheets fed in the ADF mode.		0	
116	Scanner Mode Count	Displays the total number of originals set in platen mode.		0	
117	Color Drum Count	Displays the total number of prints when using the color drum.		0	
118	Paper Size Count	Displays the total number of prints made in each paper size. See Remarks (10).		0	Display counters for each paper size by pressing the # key.
119	CLR All Total Count	Clears the following counters: SP Nos. 111, 115, 116, 117, and 118.	0: No 1: Yes	0	
*120 -1	User Code Mode	Selects user code mode, and displays the total number of prints made in the User Code mode.	0: No 1: Yes	0	See the user code mode section.

Service Tables

No.	Display	Function	Data	Factory Setting	Comments
-2	Auto Reset Time	Selects the auto reset time.	0: Unlimited 1: 3 min. 2: 5 min.	0	Displays only when "Yes" is selected in 120-1.
*121.	UC Count	Displays the total number of masters and prints made by each user code.		0	Press the # key to shift to another user code.
*122	Clear UC Count	Clears every user code counter.	0: No 1: Yes	0	Same as above.
*123	Total UC Count	Displays the total number of masters and prints for up to 20 user codes.		0	
*124	Clear Total UC Count	Clears the total user code counter.	0: No 1: Yes	0	
130	Input Check Mode	Displays the inputs from sensors and switches.			See the input check table.
131	Output Check Mode	Turns on the electrical components.			See the output check table.
132	All Indicators ON	Turns on all the indicators on the operation panel.			Press the # key to light all the indicators.
133	Sorter Cleaning Mode	In this mode, one bin shift is carried out when the Print Start key is pressed. First, select the 1st sorter or 2nd sorter.	1: 1st Sorter 2: 2nd Sorter	1	Depending on the number selected in this mode, the machine goes to 133-1 or 133-2.
133-1	Sorter Cleaning Mode (1st Sorter)	1. When the Print Start key is pressed once, the bin returns to the home position. 2. Each time the Print Start key is pressed after this, one bin shift is carried out. When the 20th bin shift is done, the bins return to the home position.			

No.	Display	Function	Data	Factory Setting	Comments
133-2	Sorter Cleaning Mode (2nd Sorter)	1. When the Print Start key is pressed once, the bin returns to the home position. 2. Each time the Print Start key is pressed after this, one bin shift is carried out. When the 20th bin shift is done, the bins return to the home position.			
135	SN: 1st Paper Exit	Displays the 1st paper exit sensor voltage.			Unit: Volts
136	SN: 2nd Paper Exit	Displays the 2nd paper exit sensor voltage.			Unit: Volts
137	SN: Master Eject	Displays the master eject sensor voltage.			Unit: Volts
138	SN: Drum Master	Displays the drum master sensor voltage.			Unit: Volts
140	Ink Detection	Specifies whether ink detection is done.	0: No 1: Yes	1	
141	Paper Detection	Specifies whether paper end detection is done.	0: No 1: Yes	1	
** 141-1	Size Detection	Specifies whether paper size detection is done or not.	0: Yes 1: No size detection	0	If "0" is selected in this mode, the machine goes to 142-2.
141-2	Size Detection OFF?	Specifies whether the paper size indication on the operation panel is erased.	0: No 1: Yes	0	
*143	Orig. Size Detection	Specifies whether original size detection is done.	0: No 1: Yes	1	
145	Drum Mast. Detection	Specifies whether drum master detection is done.	0: No 1: Yes	1	
146	ADF Cover Detection	This mode disables the ADF Cover Sensor.	0: Disabled 1: Enabled	1	
147	Platen Set Detection	This mode disables the ADF Set Sensor.	0: Disabled (the ADF is always set) 1: Enabled	1	
150	Control ROM No.	Displays the ROM part number and the ROM manufacturing date.		P/No.	1994/10/07 = YYYY/MM/DD

No.	Display	Function	Data	Factory Setting	Comments
151	Machine No.	Displays the machine serial number and the installation date.		0	Input the serial number and the installation date.
152	Service Tel. No.	Input the service representative's telephone number, which is displayed with the service call code.		0	Use the number keys to input the telephone number at installation. Press the Memory/ Class key if you wish to add a space between the digits.
153	Last Service Code	Displays the last service call.		0	
*160	♥: Margin Ers. A3 ❑ ♦: Margin Ers. 11x17❑	Adjust the margin erase area. ♥: A3 ♦: 11" x 17"	(50 to 307) x (50 to 432) mm	♥: 289 x 416mm ♦: 271 x 428mm	
*161	♥: Margin Ers. B4 ❑ ♦: Margin Ers. 8.5 x 14	Adjust the margin erase area. ♥: B4 ♦: 8 1/2" x 14"	(50 to 307) x (50 to 432) mm	♥: 249 x 360mm ♦: 208 x 352 mm	
*162	♥: Margin Ers. A4 ❑ ♦: Margin Ers. 8.5x11 ❑	Adjust the margin erase area. ♥: A4 Landscape ♦: 8 1/2" x 11" Landscape	(50 to 307) x (50 to 432) mm	♥: 202 x 293 mm ♦: 208 x 275 mm	
*163	♥: Margin Ers. A4 ❑ ♦: Margin Ers. 8.5x11 ❑	Adjust the margin erase area. ♥: A4 Portrait ♦: 8 1/2" x 11" Portrait	(50 to 307) x (50 to 432) mm	♥: 289 x 206 mm ♦: 271 x 212 mm	

No.	Display	Function	Data	Factory Setting	Comments
*164	♥: Margin Ers. B5 ❑ ♦: Margin Ers. 5.5x8.5 ❑	Adjust the margin erase area. ♥: B5 Landscape ♦: 5 1/2" x 8 1/2" Landscape	(50 to 307) x (50 to 432) mm	♥: 174 x 253 mm ♦: 132 x 212 mm	
*165	♥: Margin Ers. B5 ❑ ♦: Margin Ers. 5.5x8.5 ❑	Adjust the margin erase area. ♥: B5 Portrait ♦: 5 1/2" x 8 1/2" Portrait	(50 to 307) x (50 to 432) mm	♥: 249 x 178 mm ♦: 208 x 136 mm	
*166	♥: Margin Ers. A5 ❑ ♦: Margin Ers. **1 ❑	Adjust the margin erase area. ♥: A5 Landscape ♦: 2" x 2"	(50 to 307) x (50 to 432) mm	♥: 140 x 206 mm ♦: 50x 50 mm	
*167	♥: Margin Ers. A5 ❑ ♦: Margin Ers. **2 ❑	Adjust the margin erase area. ♥: A5 Portrait ♦: 2" x 2"	(50 to 307) x (50 to 432) mm	♥: 202 x 144 mm ♦: 50x 50 mm	
*168	♥: Margin Ers. A6 ❑ ♦: Margin Ers. **3 ❑	Adjust the margin erase area. ♥: A6 Landscape ♦: 2" x 2"	(50 to 307) x (50 to 432) mm	♥: 97x 144 mm ♦: 50x 50 mm	
*169	♥: Margin Ers. A6 ❑ ♦: Margin Ers. **4 ❑	Adjust the margin erase area. ♥: A6 Portrait ♦: 2" x 2"	(50 to 307) x (50 to 432) mm	♥: 140 x 101 mm ♦: 50x 50 mm	
*170	♥: Margin Ers. ** ❑ ♦: Margin Ers. **5 ❑	Adjust the margin erase area. ♥: Others ♦: 2" x 2"	(50 to 307) x (50 to 432) mm	♥: 92x 144 mm ♦: 50x 50 mm	

Remarks

1) SP Mode No. 38 – ADF Scan Line Position
The printing position moves as shown below.

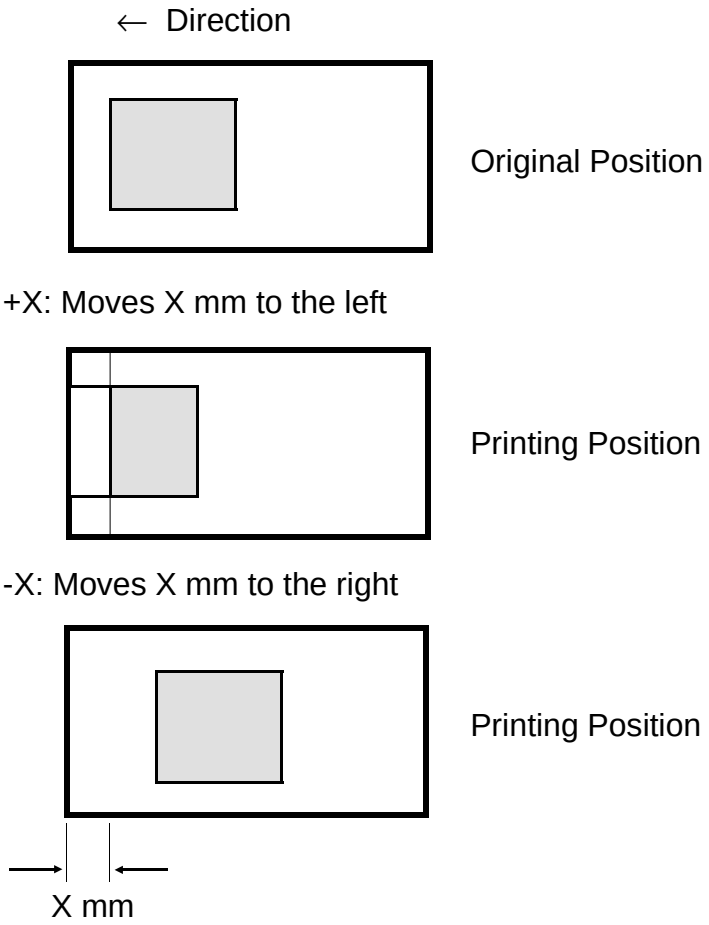

2) SP Mode No. 39 – Image Center Position

The printing position moves as shown below.

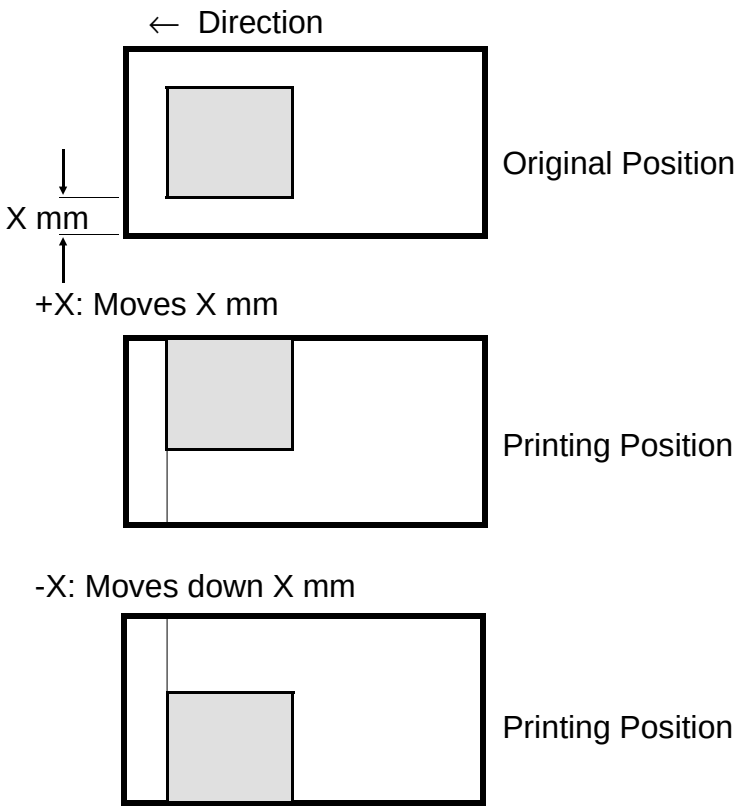

Note: When adjusting the scanner image position input "0" first:

Example) X = 0.9 mm → "0", "9", and then press the # key.

3) SP Mode No. 86 – A3 Drum 2 Count Up

The counter increment goes up by 2 if an A3 drum is installed, regardless of the size of paper.
The default setting is changed with DIP switch 102-5. See Sub-section 2.3.1. of section 4.

4) SP Mode No. 87 – Memory Print

Normally, in platen mode (when no originals are placed in the ADF), the machine stops when the 1st print job is finished even if the tape marker is installed, so that the next original can be placed. The next printing job starts when the Print Start key is pressed.
If "1" is selected in this mode, after the 1st print job is finished, the tape marker feeds a strip of tape and the next print job starts immediately afterwards.

5) SP Mode No. 88 – Auto Memory/ Class

In Memory/Class mode, the machine normally stops when the first print job is finished if the tape marker is not installed.
If "1" is selected in this mode, the machine stops for a while (this interval is the same as when the tape marker is operating). Then it continues with the next print (or master making) job.

6) SP Mode 92 – Thermal Paper Mode

You can use this mode to test the thermal head.

Place some thermal printer in the plotter face down and change this SP Mode to 1. Place an original on the exposure glass and press the Master Making key. The machine starts printing on the thermal paper without doing the master clamp process.

You can also enable SP Mode 90 and press the Master Making key to test the thermal head without placing an original on the exposure glass.

7) SP Mode 93 – Erase Area Check

This checks the erased area for shadow erase (Center and Edge Margin Erasing). If you make a master and print an image with this mode, the machine makes a background pattern on the area to be erased.

8) SP Mode No. 95 – Scanner Free Run

- It is possible to change the first scanner speed by changing the magnification ratio:
  25 to 200 % (Maximum speed = 25 %)
- To start the scanner free run, press the Print Start key after selecting "Lamp On/Off" using the # key.
  Input a magnification ratio if you wish to change the first scanner speed, before you press the Start key. (Factory setting = 25 %)
- To stop the scanner free run, press the Stop key. The scanner returns to home position, then stops.
- The machine does not exit SP mode until the scanner returns to home position correctly.

9) SP Mode No. 96 – ADF Original Feed Check

- It is possible to change the original feed speed by changing the magnification ratio:
  25 to 200 % (Maximum speed = 25 %)
- To start original feed, press the Print Start key after placing originals in the ADF.
  Input a magnification ratio if you wish to change the original feed speed, before you press the Start key. The ADF starts feeding until all originals are fed.
- To stop feeding, press the Stop key. The original stops at this moment.
- If the original feed fails, or if the Stop key is pressed, the "A + Jam" indicator turns on.
  If the jammed originals are removed from the ADF, the jam indicator turns off and the failure is reset.
- The machine does not exit SP mode during feeding.

10) SP Mode No. 118 – Print Size Count

- The print size counter indicates the following paper sizes:

A4 version	**LT version**
• A3	• DLT
• B4	• LG
• A4 Landscape	• LT Landscape
• A4 Portrait	• LT Portrait
• B5 Landscape	• HLT
• B5 Portrait	• * (Others)
• * (Others)	

3.3 THERMAL HEAD TEST

This function is used to determine which printer component is causing an image problem on the master.

In this mode, the background pattern that is printed covers the entire sheet of paper.

Procedure

1. Place paper on the paper table.

   NOTE: To reduce thermal head load, use the smallest paper size possible, i.e. the smallest paper width on which the part with the image problem can be printed.

2. Access SP mode.
3. Input No. 90 and press the Enter key.

   NOTE: The factory setting is pattern No. 7. If necessary, input another background pattern with the Number keys.

4. Press the Master Making key (an original is not necessary).
5. Make some prints and check the image.

Assessment

If the printout is normal, a Part A component is defective.

If the printout is abnormal, a Part B component is defective.

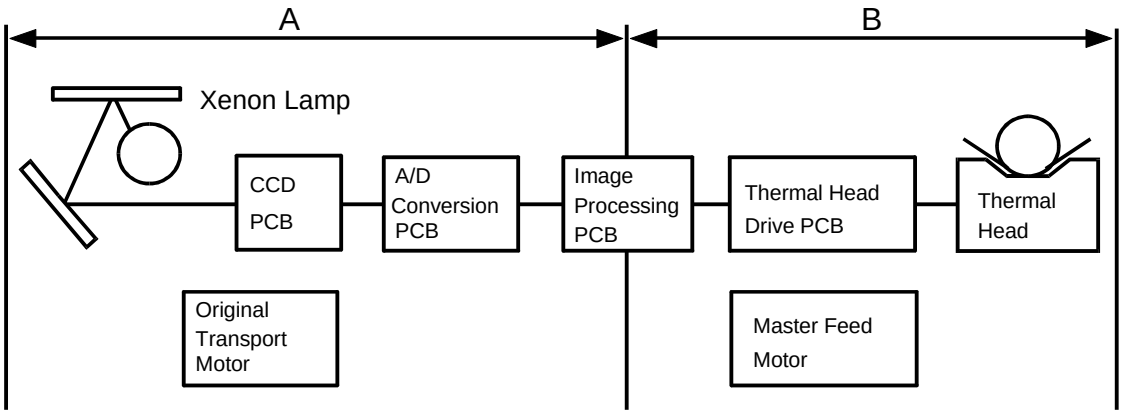

C223M511.wmf

- This mode can be used in combination with SP mode No. 92, Thermal Paper Mode.

3.4 COMMAND SHEET CHECK

Normally, Fn 9 or Fn 19 cannot be input in Make-up mode.

By changing the data of SP mode #91 from 0 to 1, Fn 9 or Fn 19 can be input.

Command No.	Display	Function
Fn 9	OVERLAY	Prints both the original image and designated area of the command sheet on the paper.
Fn 19	OVERLAY	

This function is used to check the position of the designated area on the command sheet. It is checked in relation to the original image to make sure that the command sheet is being read correctly.

Procedure

1. Access SP mode.
2. Input 91 and press the Enter key.
3. Input 1 with the number keys and press the Enter key.
4. Press the Clear Modes key to leave SP mode.
5. Place the command sheet and the original on the ADF.
6. Press the Make-up key and input Fn 9 or Fn 19 (these commands have the same function).
7. Input 1 for the undesignated area.
8. Press the Master Making key and then check the print to make sure that the area designated by the command sheet is in the correct position on the original image.

NOTE: 1. Only one command sheet can be stored in memory. If two or more command sheets are read, only the last command sheet is output.

2. Make sure to return the SP mode to its original setting after checking the designated area position.

3.5 INPUT/OUTPUT CHECK MODE

This program checks the electrical components. The procedure for accessing the program is as follows:

3.5.1 Input Check Mode Access Procedure

1. Access SP mode. (See the SP mode access procedure.)
2. Enter 130 (SP mode number) with the number keys.
3. Press the Enter key.
4. Enter the desired input number. (See the input check table.)

   NOTE: The input number can be shifted up or down by pressing the Zoom key.

5. Press the Enter key.

   NOTE: In the input check mode, all image position LEDs and printing speed LEDs turn on when a sensor or switch that is being tested is actuated. A beep will also be heard.

6. Press the Enter key to return the display to the initial input check menu.
7. Press the Clear Modes key to leave SP mode.

3.5.2 Output Check Mode Access Procedure

1. Access SP mode. (See the SP mode access procedure.)
2. Enter 131 (SP mode number) with the number keys.
3. Press the Enter key.
4. Enter the desired output number. (See the output check table.)

   NOTE: The output number can be shifted up or down by pressing the Zoom key ("+" or "–").

5. Press the Enter key.
6. Press the Print Start key to turn on the component.
7. Press the Enter key to return the display to the initial output check menu.
8. Press the Clear Modes key to leave the SP mode.

3.5.3 Input Check Table

Code	LCD Display	Component Checked
1.	SN: ADF Cover In- 1	ADF Cover Sensor
2.	SN: 1st Original (ADF) In- 2	Original Set Sensor
3.	SN: 2nd Original (ADF) In- 3	Original Registration Sensor
4.	SN: 3rd Original (ADF) In- 4	Scan Line Sensor
5.	SN: Original Size 0 In- 5	Original Width Sensor – 0
6.	SN: Original Size 1 In- 6	Original Width Sensor – 1
7.	SN: Original Size 2 In- 7	Original Width Sensor – 2
8.	SN: Original Size 3 In- 8	Original Width Sensor – 3
9.	SN: Cassette Size 0 In- 9	Cassette Size Switch – 4
10.	SN: Cassette Size 1 In-10	Cassette Size Switch – 3
11.	SN: Cassette Size 2 In-11	Cassette Size Switch – 2
12.	SN: Cassette Size 3 In-12	Cassette Size Switch – 1
13.	SN: Paper Size 0 In-13	Paper Width Sensor – 0
14.	SN: Paper Size 1 In-14	Paper Width Sensor – 1
15.	SN: Paper Size 2 In-15	Paper Width Sensor – 2
16.	SN: Paper Size 3 In-16	Paper Width Sensor – 3
17.	SN: Paper Size 4 In-17	Paper Length Sensor
18.	SN: Paper End In-18	Paper End Sensor
19.	SW: Paper Table Open In-19	Paper Table Open Switch
20.	SN: Paper Table Low Limit In-20	Paper Table Lower Limit Sensor
21.	SN: Paper Table Height In-21	Paper Table Height Sensor
22.	KEY: Lower Paper Feed Table In-22	Paper Table Down key

Code	LCD Display	Component Checked
23.	SW: Right Cutter In-23	Right Cutter Switch
24.	SW: Left Cutter In-24	Left Cutter Switch
25.	SN: Master Buckle In-25	Master Buckle Sensor
26.	SN: Master End In-26	Master End Sensor
27.	SIG: Ink In-27	When the Ink Detecting Pin detects ink
28.	SIG: Color Drum In-28	When a color drum is installed
29.	SIG: Drum Size 0 In-29	When an A3/DLT or A4/LG drum is installed
30.	SIG: Drum Size 1 In-30	When an A4/LT drum is installed
30.	SIG: Drum Set In-30	When an A4/LT drum is installed
31.	SN: Pressure Plate High Position In-31	Upper Pressure Plate Sensor
32.	SN: Pressure Plate Low Position In-32	Lower Pressure Plate Sensor
33.	SW: Master Eject Box In-33	Master Eject Box Switch
34.	SN: Full Master In-34	Full Master Box Sensor
35.	SN: Printing Pressure In-35	Printing Pressure Sensor
36.	SN: 1st Drum Position In-36	First Drum Position Sensor
37.	SN: 2nd Drum Position In-37	Second Drum Position Sensor
38.	SW: Manual Master Cut In-38	Master Cut Switch
39.	SIG: Key Counter In-39	When a key counter is installed
40.	SIG: Power Supply Temp. Detect In-40	When the power supply unit temperature is over 85°C
41.	SN: 1st Paper Exit In-41	First Paper Exit Sensor
42.	SN: 2nd Paper Exit In-42	Second Paper Exit Sensor
43.	SN: Master Eject In-43	Master Eject Sensor
44.	SN: Drum Master In-44	Drum Master Sensor

Code	LCD Display	Component Checked
45	SN: Scanner Home Position In-45	Scanner Home Position Sensor
46	SN: Platen Angle (Scanner) In-46	Platen Cover Position Sensor
47	SN: Platen Set (Scanner) In-47	ADF Set Sensor
48	SN: Platen Original (Scanner) In-48	Original Sensor
49	SN: 4th Original (ADF) In-49	Original Exit Sensor
50	SW: Delivery Table Open In-50	Delivery Table Open Switch
60	SN: Feed Unit Low (1st Sorter) In-60	1st Transport Non-Sort Mode Position Sensor (Sorter)
61	SN: Feed Unit High (1st Sorter) In-60	1st Transport Sort Mode Position Sensor (Sorter)
62	SN: Feed Unit Cover (1st Sorter) In-62	1st Transport Cover Open Switch (Sorter)
63	SN: Safety Switch (1st Sorter) In-63	Staple Cover Open Switch (1st Sorter)
64	SN: Staple Cover (1st Sorter) In-64	Staple Cover Open Switch (1st Sorter)
65	SN: Paper Edge (1st Sorter) In-65	Trailing Edge Sensor (Sorter)
66	SN: Sort Paper (1st Sorter) In-66	1st Transport Sensor (Sorter)
67	SN:Stapler Position (1st Sorter) In-67	Staple Position Switch (1st Sorter)
68	SN: Stapler Unit Move (1st Sorter) In-68	Staple Unit Movement Switch (1st Sorter)
69	SN: Stapler H.P. (1st Sorter) In-69	Staple Home Position Sensor (1st Sorter)
70	SN;Staple End (1st Sorter) In-70	Staple End Sensor (1st Sorter)
71	SN: Jogger Bar H.P. (1st Sorter) In-71	Jogger Bar Home Position Sensor (1st Sorter)
72	SN: Lead Cam H.P. (1st Sorter) In-72	Helical Wheel Position Sensor (1st Sorter)
73	SN: Bin Home Position (1st Sorter) In-73	Bin Unit Home Position Sensor (1st Sorter)
74	SN: Bin Paper (1st Sorter) In-74	Bin/Jam Sensor (1st Sorter)
75	KEY: Stapler (1st Sorter) In-75	Manual Staple Key (1st Sorter)
76	SN: Staple Paper (1st Sorter) In-76	Paper Sensor-Stapler (1st Sorter)

Code	LCD Display	Component Checked
77	SN: Bin Shift MT CLK (1st Sorter) In-77	Bin Shift Motor Rotation Sensor (1st Sorter)
78	SN: Feed Motor CLK1 (1st Sorter) In-78	1st Transport Motor Rotation Sensor (1st Sorter)
79	SN: Feed Motor CLK2 (1st Sorter) In-79	2nd Transport Motor Rotation Sensor (Sorter)
80	SN: Staple Cover (2nd Sorter) In-80	Staple Cover Open Switch (2nd Sorter)
81	SN: Paper Edge (2nd Sorter) In-81	Trailing Edge Sensor (2nd Sorter)
82	SN: Sort Paper (2nd Sorter) In-82	2nd Transport Sensor (Sorter)
83	SN: Stapler Position (2nd Sorter) In-83	Staple Position Switch (2nd Sorter)
84	SN: Stapler Unit Move (2nd Sorter) IN-84	Staple Home Position Sensor (2nd Sorter)
85	SN: Stapler H.P. (2nd Sorter) IN-85	Staple End Sensor (2nd Sorter)
86	SN: Staple End (2nd Sorter) In-86	Staple End Sensor (2nd Sorter)
87	SN: Jogger Bar H.P. (2nd Sorter) In-87	Jogger Bar Home Position Sensor (2nd Sorter)
88	SN: Lead Cam H.P. (2nd Sorter) In-88	Helical Wheel Home Position Sensor (2nd Sorter)
89	SN: Bin Home Position (2nd sorter) In-89	Bin Unit Home Position Sensor (2nd Sorter)
90	SN: Bin Paper (2nd Sorter) In-90	Bin/Jam Sensor (2nd Sorter)
91	KEY: Stapler (2nd Sorter) In-91	Manual Staple Key (2nd Sorter)
92	SN: Stapler Paper (2nd Sorter) In-92	Paper Sensor-Stapler (2nd Sorter)
93	SN: Bin Shift MT .LK (2nd Sorter) In-93	Bin Shift Motor Rotation Sensor (2nd Sorter)
100	SN: Cassette Paper	Cassette Paper End Sensor (LCT)
101	SN: Paper End	Tray Paper Position Sensor (LCT)
102	SN: Paper Position	Tray Paper Position Sensor (LCT)
103	SIG: LCT	CN110 Connection (Should be ON when connected)
104	SN: Low Limit	Tray Lower Limit Sensor (LCT)
105	SN: Paper MAX. Limit	Maximum Paper Load Sensor (LCT)
106	KEY: Lower LCT	Tray Down Switch (LCT)
107	SN: Paper Size 0	Paper Size Sensor 0 (LCT)
108	SN: Paper Size 1	Paper Size Sensor 1 (LCT)
109	SN: Paper Size 2	Paper Size Sensor 2 (LCT)
110	SN: Paper Size 3	Paper Size Sensor 3 (LCT)

Code	LCD Display	Component Checked
111	SN: Paper Size 4	Paper Size Sensor 4 (LCT)
112	SN: LCT Cover	Cover Open Switch (LCT)
113	SIG: Cassette	Cassette Switch (LCT)

3.5.4 Output Check Table

Code	LCD Display	Description
2	MOTOR: ADF Drive Out- 2	Turns on the ADF drive motor.
3	MOTOR: Master Eject Out- 3	Turns on the master eject motor.
4	MOTOR: Pressure Plate Up/Down Out- 4	Turns on the pressure plate up/down motor.
5	MC: Master Reverse Roller Out- 5	Turns on the master reverse roller magnetic clutch.
6	MOTOR: Vacuum Out- 6	Turns on the vacuum fan motor.
7	MOTOR: Air Knife Out- 7	Turns on the air knife motor.
8	SIG: Key Counter Out- 8	Increments the key counter.
9	COUNTER: Master Out- 9	Increments the master counter.
10	COUNTER: Paper Out-10	Increments the total counter.
11	SOL: Paper Separation Release Out-11	Turns on the separation plate release solenoid.
12	SOL: Ink Supply Out-12	Turns on the ink supply solenoid.
13	SOL: Drum Lock Out-13	Turns on the drum lock solenoid.
14	SOL: Paper Feed/Print Pressure Out-14	Turns on the paper feed solenoid and the printing pressure solenoid.
15	SOL: Master Feed Clamper Out-15	Turns on the master feed clamper solenoid.
16	SOL: Master Eject Clamper Out-16	Turns on the master eject clamper solenoid.
17	SOL: Master Eject Out-17	Turns on the master eject solenoid.
18	RELAY: Paper Table Down Out-18	Turns on the paper table drive motor (down).
19	RELAY: Paper Table Up Out-19	Turns on the paper table drive motor (up).
20	RELAY: Main Motor Reverse Out-20	Turns the drum in the direction opposite to the printing direction.
21	SIG: Fluorescent Lamp Out-21	Turns on the exposure lamp if the Print key is pressed. Turns off the lamp if the Print key is pressed again.
22	MOTOR: Cutter + Direction Out-22	Turns on the cutter motor (moves it to the rear of the machine).
23	MOTOR: Cutter – Direction Out-23	Turns on the cutter motor (moves it to the front of the machine).

Code	LCD Display	Description
24	MOTOR: Image Shift + Direction Out-24	Turns the image position motor in the "+" direction.
25	MOTOR: Image Shift – Direction Out-25	Turns the image position motor in the "–" direction.
26	MOTOR: Main (10 rpm) Out-26	Turns on the main motor (10 rpm).
27	MOTOR: Main (30 rpm) Out-27	Turns on the main motor (30 rpm).
28	MOTOR: Main (1st Speed) Out-28	Turns on the main motor (1st speed).
29	MOTOR: Main (2nd Speed) Out-29	Turns on the main motor (2nd speed).
30	MOTOR: Main (3rd Speed) Out-30	Turns on the main motor (3rd speed).
31	MOTOR: Main (4th Speed) Out-31	Turns on the main motor (4th speed).
32	MOTOR: Main (5th Speed) Out-32	Turns on the main motor (5th speed).
33	MOTOR: Original Feed Out-33	Turns on the original transport motor.
34	MOTOR: Master Feed Out-34	Turns on the master feed motor.
35	MOTOR: Paper Reverse Out-35	Turns on the paper return motor.
36	Turn on drum, feed/ pressure SOLs Out-36	Turns on the main motor (10 rpm), the paper feed solenoid, and the printing pressure solenoid.
37	MOTOR: Scanner	Turns on the scanner motor. Start by pressing the Print Start key. Stop by pressing the Print Start key again. Then the scanner (carriage) returns to home position when the Print Start key is pressed.
38	SOL: Sheet Insert Out-38	Turns on the master press sheet solenoid.
39	SOL: Sheet Pressure Out-39	Turns on the detection arm release solenoid.
40	MOTOR: Master Buckle Out-40	Turns on the master buffer fan motor.
41	SIG: VHD on Out-41	Applies thermal head voltage.
50	EMF Sorter Mode 1 Out-50	Available only when the EMF Sorter is installed.
51	EMF Sorter Mode 2 Out-51	Available only when the EMF Sorter is installed.
52	EMF Sorter Mode 3 Out-53	Available only when the EMF Sorter is installed.
53	EMF Sorter Mode 4 Out-53	Available only when the EMF Sorter is installed.

Code	LCD Display	Description
60	MODE: Feed Unit U/D (1st Sorter) Out-60	Turns on the paper delivery table motor.
61	MOTOR: Paper Feed (1st Sorter) Out-61	Turns on the 1st transport motor.
62	MOTOR: Paper Feed (2nd Sorter) Out-62	Turns on the 2nd transport motor.
63	MODE: Bin Shift (1st Sorter) Out-63	Turns on the bin shift motor (1st Sorter)
64	MODE: Jogger (1st Sorter) Out-64	Turns on the jogger bar motor. (1st Sorter)
65	MODE: Staple (1st Sorter) Out-65	Turns on the staple motor. (1st Sorter)
66	MODE: Bin Home (1st Sort) Out-66	Moves the bins to the home position. (1st Sorter)
67	MODE: Bin Shift (2nd Sorter) Out-67	Turns on the bin shift motor. (2nd Sorter)
68	MODE: Jogger (2nd Sorter) Out-68	Turns on the jogger bar motor. (2nd Sorter)
69	MODE: Staple (2nd Sorter) Out-69	Turns on the staple motor (2nd Sorter)
70	MODE: Bin Home (2nd Sorter) Out-70	Moves the bins to the home position. (2nd Sorter)
71	MODE: Free Running (Sorter) Out-71	The machine simulates sort speration.
100	MOTOR: Table Down (LCT) Out-100	The LCT tray drive motor moves the tray down.
101	Motor:Table Up (LCT) Out-101	The LCT tray drive motor moves the tray up.
102	MOTOR: Cassette Down Out-102	The LCT cassette bottom plate drive motor moves the plate down.
103	MOTOR: Cassette Up (LCT) Out-103	The LCT cassette bottom plate drive motor moves the plate up.

3.6 USER CODE MODE

3.6.1 User Codes

With the user code function, operators must input an authorized code before the machine will operate. The machine keeps track of the number of prints made under each code.

There are 20 user codes as follows:

No.	User Code No.
1	382
2	191
3	182
4	173
5	164
6	155
7	146
8	137
9	128
10	119
11	482
12	291
13	282
14	273
15	264
16	255
17	246
18	237
19	228
20	219

3.6.2 How To Use a User Code

1. Enter the user code (3 digits) with the number keys.
2. Press the Enter key.
3. Press the Master Making key to start printing.

NOTE: The user code mode is reset if the Clear Modes key and the Stop key are pressed together.

4. DRUM INTERCHANGEABILITY

O: Standard combination
Δ: Usable under certain conditions
X: Cannot be used

		C210 Model	C218 Model	C223 Model
Color Drum	VT3000-L (C533)	O	Δ (NOTE 1, 2, 4)	Δ (NOTE 1, 2, 4)
	VT3000-S (C535)	O	Δ (NOTE 1, 2)	Δ (NOTE 1, 2, 4)
	VT3000II-L (C556)	X (NOTE 3)	O	O (NOTE 4)
	VT3000II-S (C559)	X (NOTE 3)	O	O (NOTE 4)

NOTES:

1. The modified clamper and the cloth screen must be installed.
2. For the U.S. version machine, the modified Drum Unit Rail End must be installed (for safety standard reasons).
3. Ink leakage may occur at the trailing edge.
4. A leading margin longer than the machine specification is required for originals (VT3000-L/S: 10 mm, VT3000II-L/S: 8 mm).

SECTION 5

REPLACEMENT AND ADJUSTMENT

1. EXTERIOR

1.1 EXTERIOR COVERS

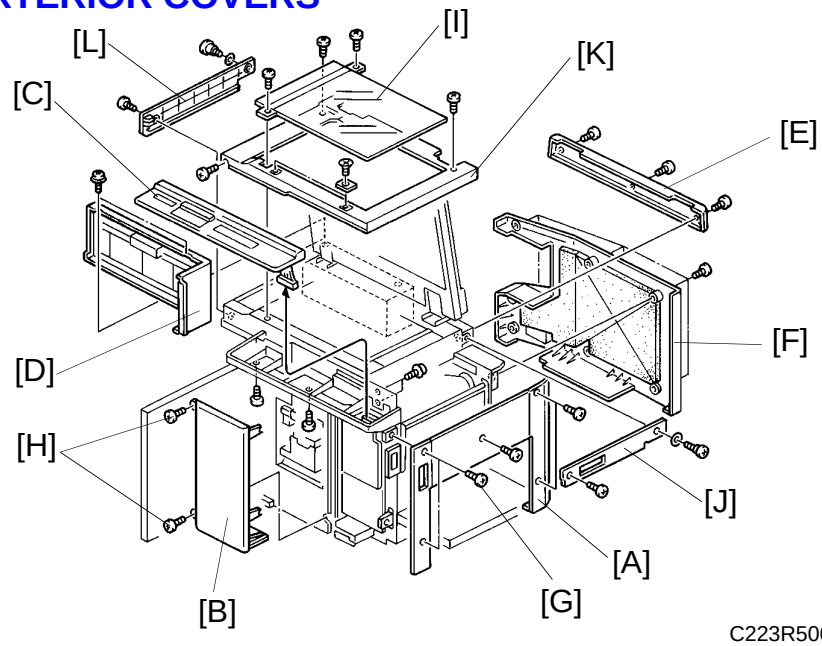

C223R500.img

When adjusting or disassembling each section, refer to the following procedures on how to remove exterior covers.

[A] Right Cover (5 screws)

[B] Right Front Cover: Open the front door, loosen the 2 screws [G], remove the 2 screws [H].

[C] Operation Panel: Open the front door, slide the scanner unit to the left and remove the 4 screws.

[D] Master Eject Cover: Open the master eject unit and remove the 2 screws.

[E] Upper Rear Cover: Remove the 3 screws.

[F] Rear Cover: Remove the 7 screws.

[K] Upper Cover
1: Remove the exposure glass [I] (2 screws).
2: Remove the right upper cover [J] (Front: 1 screw /Rear: 1 stepped screw, 1 washer)
3: Remove the upper cover [K] (5 screws)

[L] Left Upper Cover (Front: 1 screw /Rear: 1 stepped screw, 1 washer).

2. SCANNER

2.1 SCANNER POSITION ADJUSTMENT

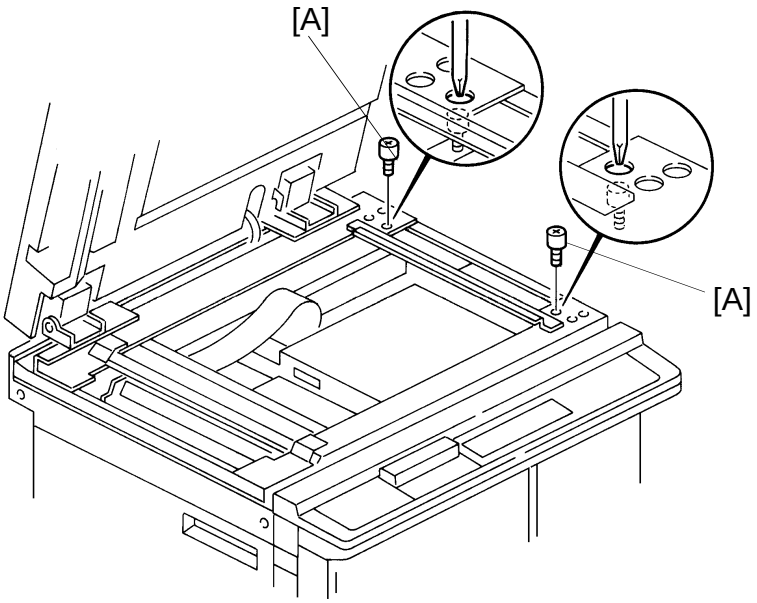

C223R501.img

Purpose: To make the position of the first and second scanners parallel with the scan line position, and to make the scanners stop at the correct home position.

1. Restart the machine with the main switch, so that the scanners move to the home position. Then, enter the scanner home position check mode (Input check mode: SP130-45).
2. Remove two positioning pins [A] that are located in the right side of the scanner.

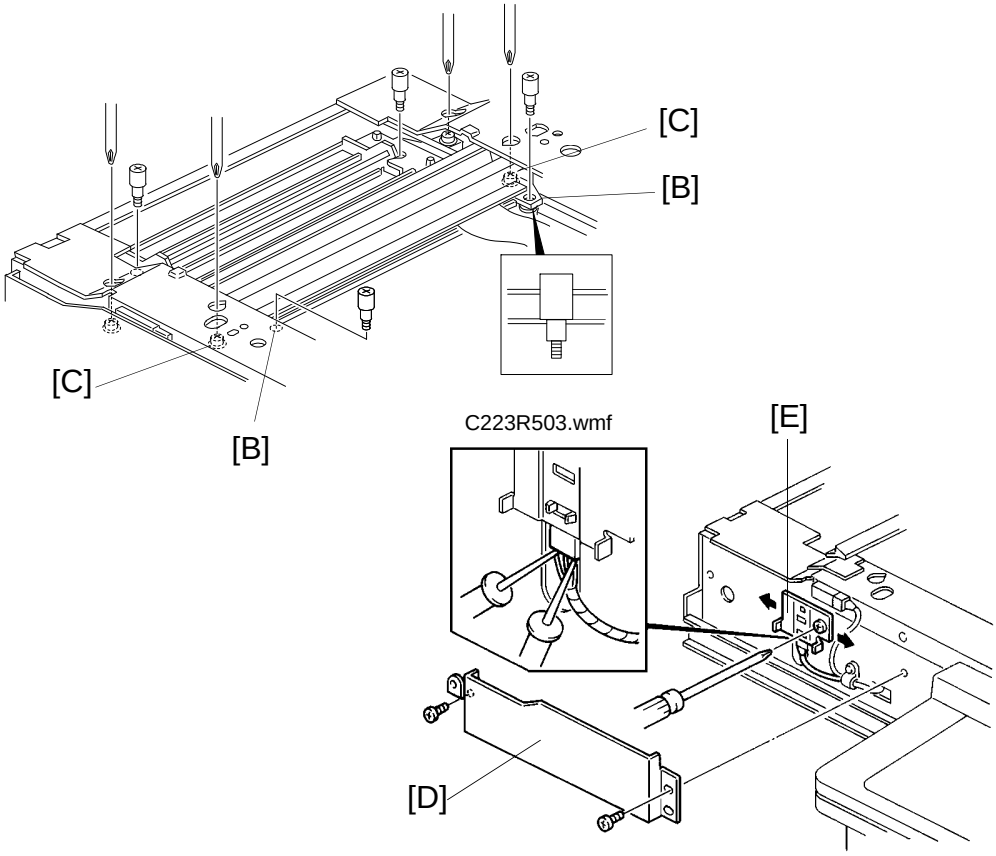

C223R502.img

3. Put the positioning pins in the front and rear openings [B] in the first scanner. Make sure that the positioning pins can be fit into the holes smoothly.
4. If the pins did not fit smoothly, adjust the position of the first scanner with the screws [C].
5. Check and adjust the position of the second scanner using the same procedure as in steps 3 and 4.
6. Slide the scanner unit and remove the sensor cover [D] (2 screws).
7. Connect the probes of a multimeter to the sensor's connector.
   CN1: +5V
   CN2: GND
   CN3: Scanner H.P (Signal)
8. Slide the sensor bracket [E] and tighten the bracket when the sensor output goes to low (5 V to 0 V).
9. Check the optics adjustments and adjust them if necessary (see Removal and Adjustment: Optics).

2.2 EXPOSURE LAMP REPLACEMENT

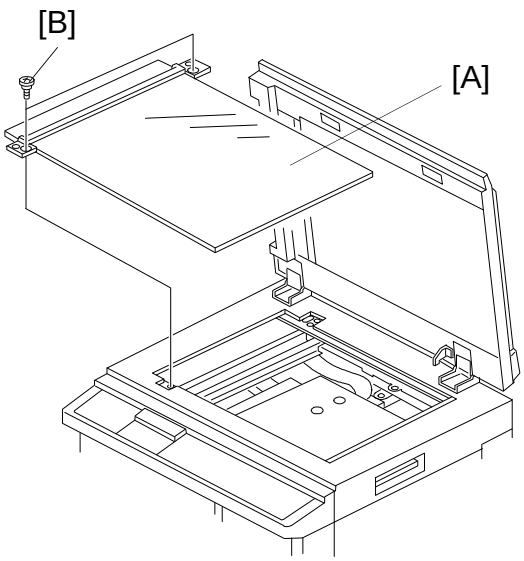

C223R504.wmf

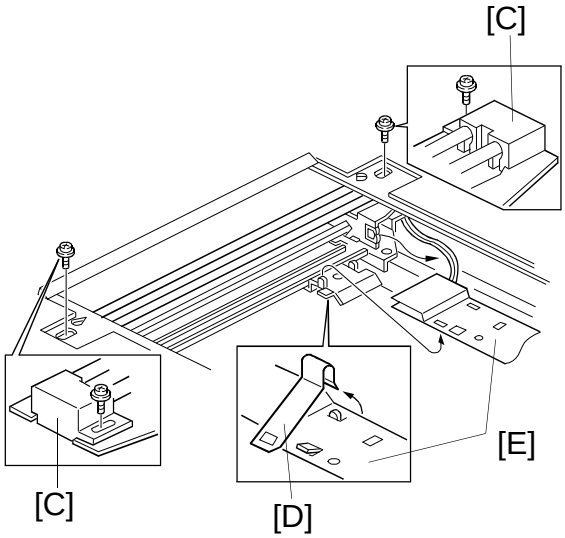

C223R506.wmf

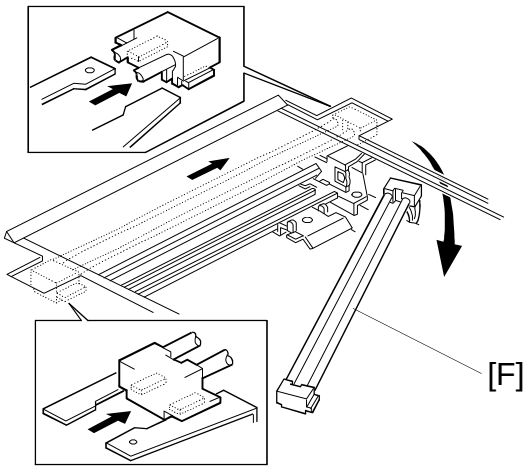

C223R505.wmf

1. Remove the exposure glass [A] (2 screws [B]).
2. Remove the screws that hold the front and rear xenon lamp terminals [C] (2 screws each).
3. Remove the plate [D] that holds the cable protection sheet [E].
4. Remove the cable protection sheet.
5. Remove the lens block cover (7 screws).
6. Remove the clamper (1 screw) holding the lamp harness.
7. Disconnect the lamp cable connectors from the lamp stabilizer.
8. Slide the xenon lamp [F] to the rear side and remove it.

2.3 SCANNER TIMING BELTS

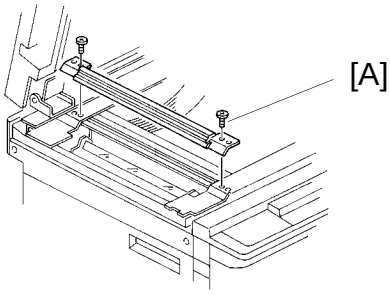

C223R507.img

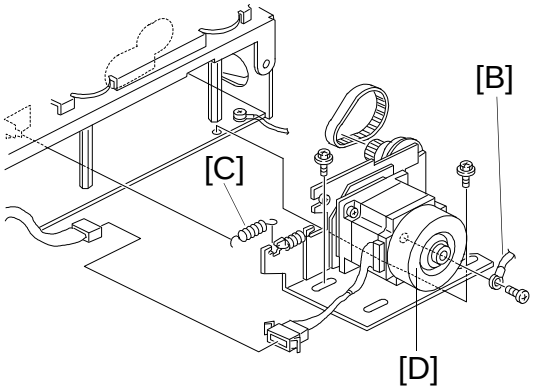

C223R508.wmf

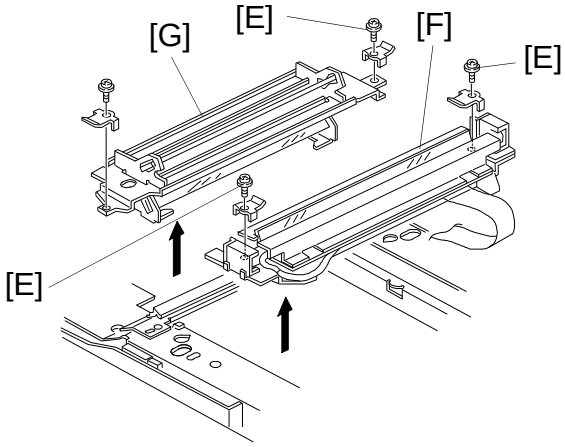

C223R509.wmf

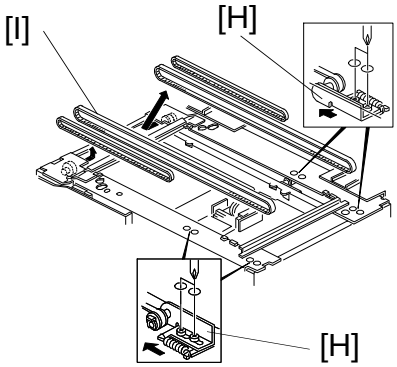

C223R510.wmf

Replacement Adjustment

1. Remove the exposure glass (see Exterior Cover Removal).
2. Remove the upper cover (see Exterior Cover Removal).
3. Remove the exit guide [A] (2 screws).
4. Remove the upper rear cover (see Exterior Cover Removal).
5. Remove the grounding wire [B] (1 screw).
6. Remove the spring [C].
7. Remove the scanner motor assembly [D] (2 screws, 1 connector, 1 timing belt).
8. Loosen the screws [E] securing both the 1st scanner [F] and 2nd scanner [G]. Then take out these scanners.
9. Loosen the screws securing the belt tension brackets [H].
10. Remove the timing belts [I].

NOTE: After replacing the scanners, the scanner position adjustment must be performed (see section 2-1).

3. OPTICS

3.1 OVERVIEW

Double-check all optical component adjustments, because these adjustments influence each other.

The following table shows the reciprocal relationship between adjustment procedures. A "O" indicates those items that must be checked (check items) after an item in the left column (adjustment item) is adjusted.

Check Item / Adjustment Item	Black Level	White Level	Shading	Scan Line Position	Reading Start Position	Focus (MTF)	Reduction Ratio (Moire)
Black Level		O					
White Level	O						
Shading	O	O					
Scan Line Position		O	O		O		
Reading Position		O	O	O			
Focus (MTF)							O
Reduction Ratio (Moire)	O	O	O	O	O	O	

Necessary Tools

1) Facsimile Test Chart R-21 (P/N 99992131)
2) Resolution Chart (P/N A0129110)
3) Oscilloscope

Oscillo-scope	Test Pin
CH1	TP603 (SIGNAL)
CH2	TP604 (OFFSET)
	TP602 (TRIG)
GND	TP601 (GND-A)

CH2 should be connected to TP604 when the black level is adjusted. For all other adjustments, CH2 should be connected to TP602.

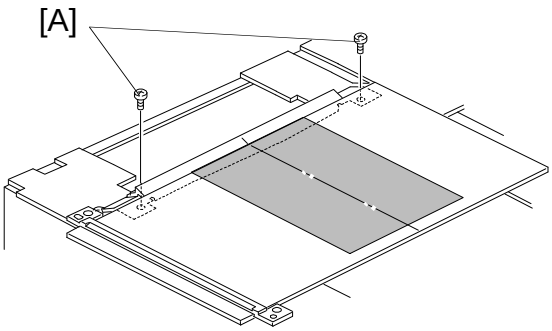

C223R511-1.wmf

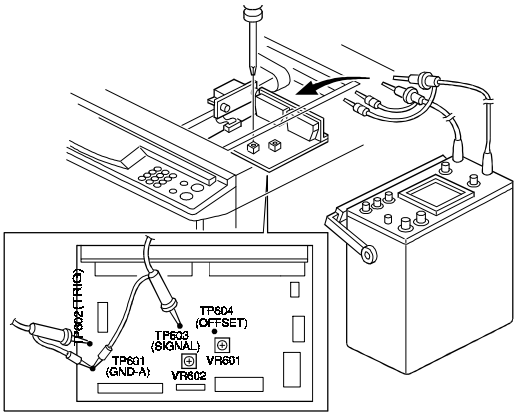

C223R512.wmf

Replacement Adjustment

3.2 PREPARATION FOR ADJUSTMENT

1. Remove the upper cover.
2. Remove the lens block cover.
3. Connect CH1 of the oscilloscope to TP603, and CH2 to TP602 (A/D conversion board). Connect both ground terminals to TP601.
4. Remove the screws [A] then take off the exposure glass, rotate it 90 degrees, and position it across the top of the machine as shown above.
5. Turn the main switch on and access SP mode. Select Output check mode (SP131) No. 21.

3.3 REDUCTION RATIO ADJUSTMENT (MOIRE ADJUSTMENT)

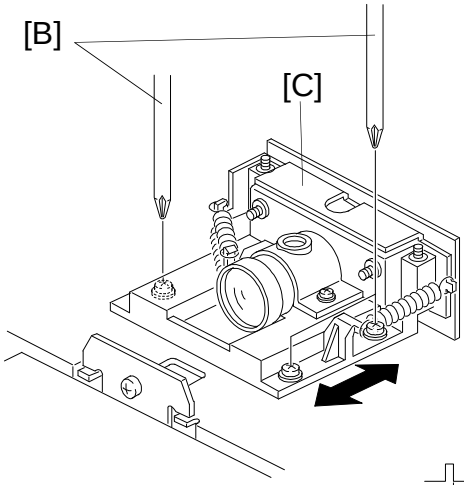

C223R513.wmf

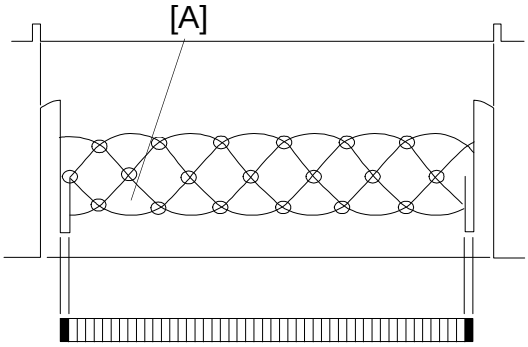

C223R514.wmf

Purpose: To adjust the magnification ratio in the main scan direction (to set the distance between the lens and the original).

Adjustment Standard: There must be 30 crosspoints [A] or fewer.

1. Position the resolution chart so that the area containing the 200 dpi pattern on the test chart can be read.
2. Press the Print Start key to turn on the xenon lamp.
3. At the same time, check if the waveform looks like the one in the illustration above.
4. If it does not, loosen the mounting screws [B] and adjust the position of the lens block [C] as indicated by the arrows.
5. After the adjustment, retighten the mounting screws [B].

3.4 FOCUS ADJUSTMENT (MTF ADJUSTMENT)

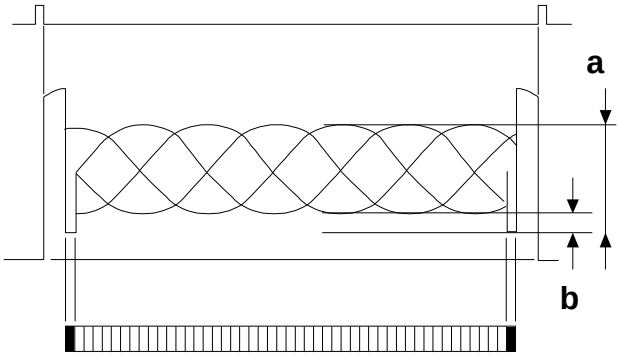

C223R516.wmf

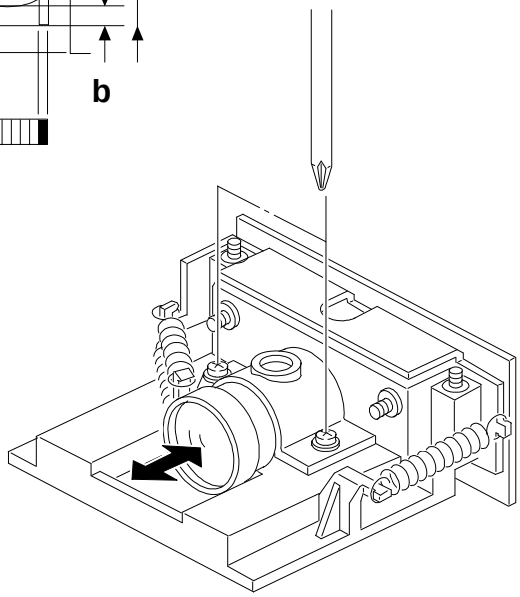

C223R515.wmf

Purpose: To adjust the focus distance between the CCD and the lens.

Adjustment Standard: a–b/a+b x 100 ≥ 60%

1. Position the resolution chart so that the 200 dpi area on the test chart can be read.
2. Press the Print Start key to turn on the xenon lamp.
3. Check if the waveform looks like the one you see in the illustration above.
4. Loosen the screw [A] and adjust the position of the lens [B] so that the length (a–b) reaches its maximum by moving it as shown by the arrow.
5. After the adjustment, retighten the screw [A].

3.5 READING START POSITION IN THE MAIN SCAN DIRECTION ADJUSTMENT

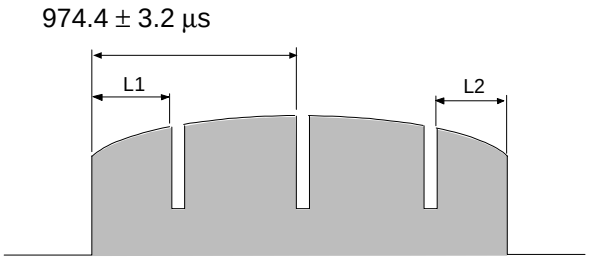

C223R543.wmf

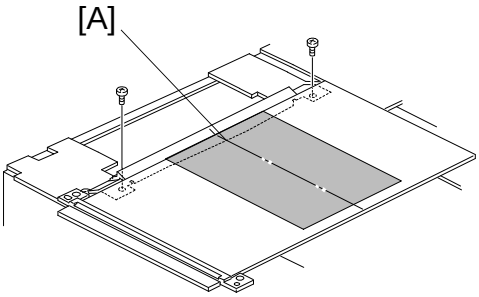

C223R511-2.wmf

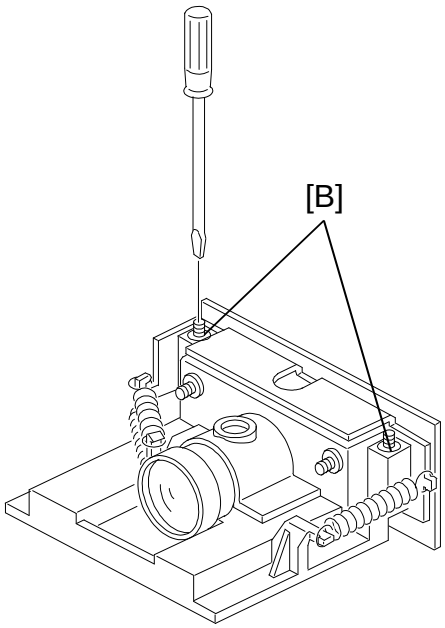

C223R518.wmf

Purpose: To align the center of the original with the center of the CCD. This will center the image on the master.

Adjustment Standard: The difference between L1 and L2 is less than 6 µs.

1. Position the R-21 test chart so that the center line, located at the leading edge of the test chart, is positioned at the center mark [A] on the exit guide.
2. Press the Print Start key to turn on the xenon lamp.
3. Check if the waveform looks like the one you see in the illustration.
4. If it does not, adjust the CCD position by turning the screws [B] until waveform is as shown in the diagram.

3.6 SCAN LINE POSITION ADJUSTMENT

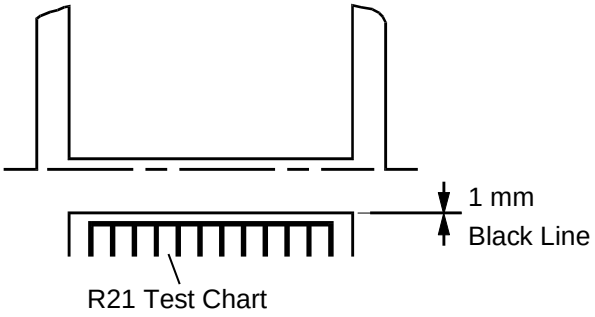

C223R519.wmf

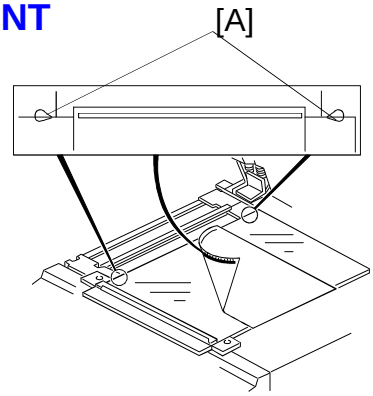

C223R593.wmf

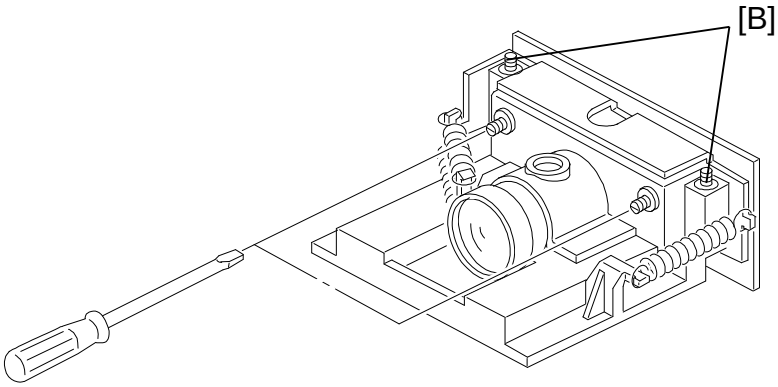

C223R520.wmf

Replacement Adjustment

Purpose: To ensure that the CCD alignment is perpendicular to the original feed direction.

Adjustment Standard: See the above illustration.

1. Position the exposure glass so that the edge of the glass is placed across the center of the holes [A] and place the black line of the test chart just at the edge of the glass as shown in the above diagram.
2. Press the Print Start key to turn on the xenon lamp and confirm that the waveform looks like the one in the above illustration.
3. If it does not, adjust the CCD board position by turning the screws [B] so that the shape of the wave is similar to that shown in the above diagram.

3.7 SHADING PLATE ADJUSTMENT

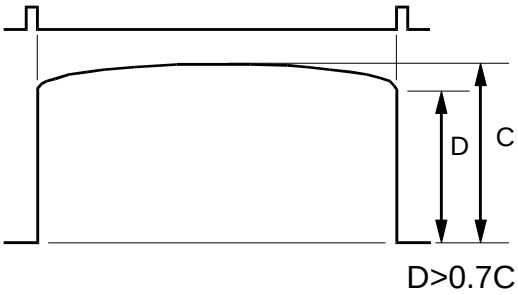

C223R522.wmf

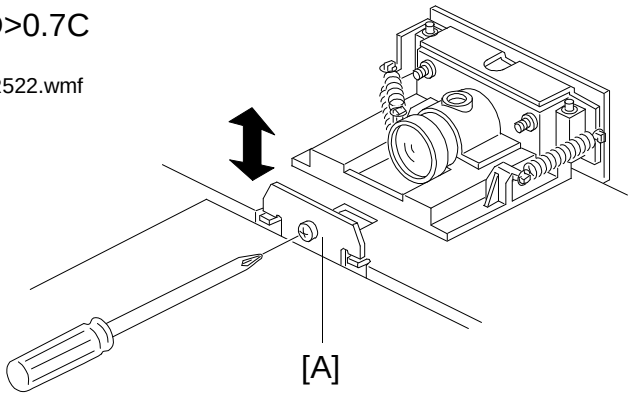

C223R523.wmf

- The middle of the waveform should be higher than the ends.

Purpose: To correct light intensity distortion properly.

Adjustment Standard: See the above illustration.

1. Position the resolution chart so that the white area can be read.
2. Press the Print Start key to turn on the xenon lamp.
3. Confirm that the above white level waveform is displayed.
4. If it is not, move the shading plate [A] vertically (up or down) until the waveform matches the one in the above diagram.

3.8 WHITE LEVEL AND BLACK LEVEL ADJUSTMENT

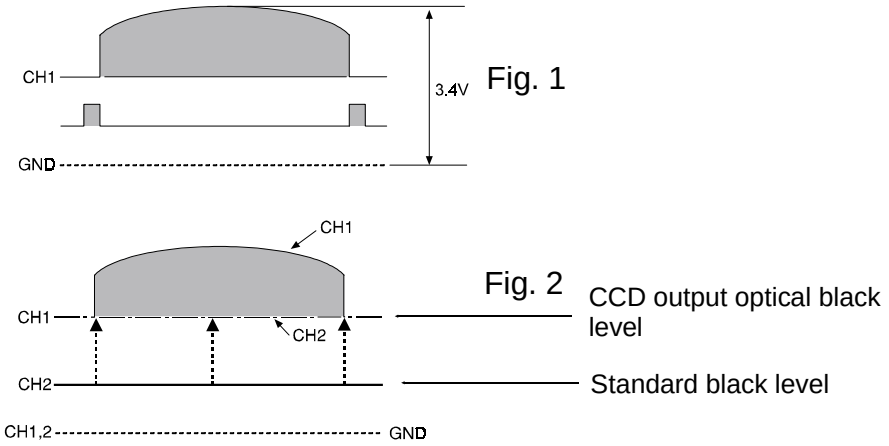

C223R524.wmf

Purpose: To reproduce the correct original image density.

1. Position the resolution chart so that the white area can be read.
2. Press the Print Start key to turn the xenon lamp on.
3. Adjust VR601 on the A/D conversion board so that the maximum level is 3.4 ± 0.1 V (see Fig. 1).
4. Connect CH2 of the oscilloscope to TP604.
5. Check the standard black level at TP604. It should be the same as the optical black level of the CCD output. If it is not, adjust the standard black level by turning VR602 (see Fig. 2).

   NOTE: 1. When adjusting the standard black level, the GND level of CH1 and CH2 should be the same.
   2. If the standard black level is changed, the white level also changes. Readjust the white level after adjusting the black level.

Replacement Adjustment

3.9 MAIN-SCAN IMAGE POSITION ADJUSTMENT (PLATEN MODE)

Purpose: Adjust the master making start position to match the original center to the print image center.

1. Access the SP mode and select "1" in SP39.
2. Enter the desired value for the image position in the main-scan direction using the number keys. It can be changed to any value from –4.9 mm to +4.9 mm in 0.1 mm steps.
3. Press the Enter key to store the setting. Then leave the SP mode.
4. Make a new master and check the image position in the main scan direction.

3.10 SUB-SCAN IMAGE MAGNIFICATION ADJUSTMENT (PLATEN MODE)

Purpose: Adjust the scanner motor speed to fix the original image length to the print image length.

Adjustment Standard: 100 ± 0.5%

1. Access the SP mode and select SP No. 30.
2. Change the magnification in the sub-scan direction using the number keys. It can be changed to any value from –1.9% to +1.9% in 0.1 % steps.
3. Press the Enter key to store the setting. Then leave the SP mode.
4. Make a new master and check the image magnification.

4. MASTER FEED

4.1 THERMAL HEAD VOLTAGE ADJUSTMENT

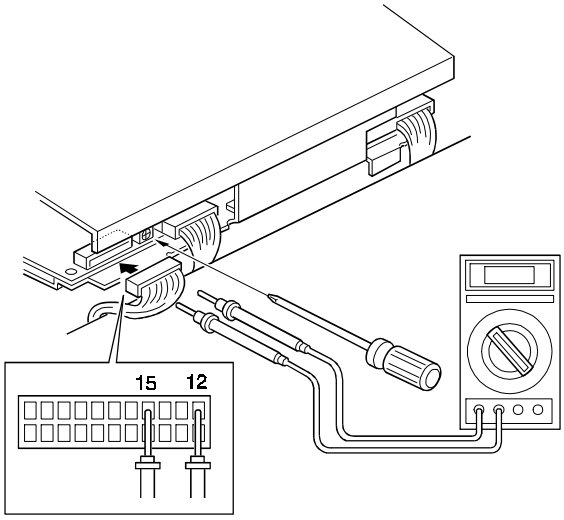

C223R527.wmf

Purpose: To maintain quality when making masters and to extend the lifetime of the thermal head.

Adjustment Standard:

Refer to the voltage value (X) on the thermal head decal. The adjustment voltage should be between "X-0.1" and "X".

NOTE: This adjustment is always required when the thermal head or power supply unit is replaced.

1. Turn off the main switch and remove the paper exit cover plate (4 screws).
2. Check the voltage on the thermal head decal. (The voltage is different for each thermal head.)
3. Turn on the main switch.
4. Access the SP mode and select output check mode (SP131) No. 41.
5. Press the Print Start key to apply thermal head voltage continuously (60 seconds).
6. Check the voltage between CN503-15 and CN503-12. If the voltage is out of standard, turn VR1 on the power supply board to adjust the voltage.

4.2 BELT TENSION ADJUSTMENT

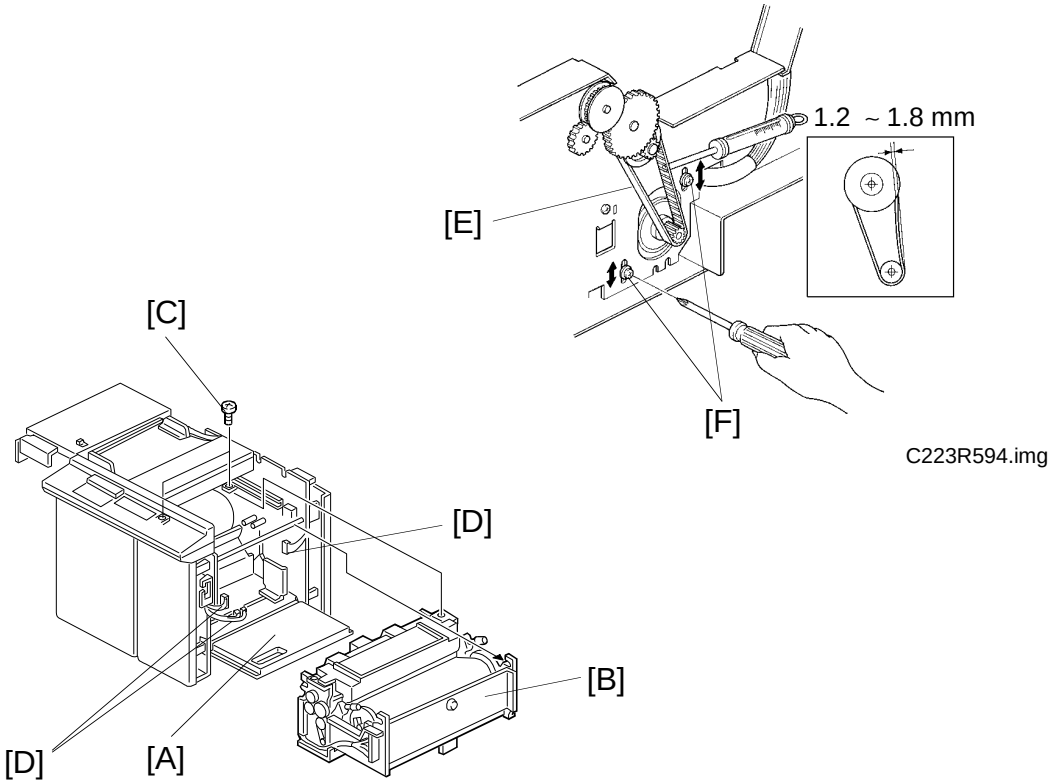

C223R605.wmf

Purpose: To ensure that proper rotation for the master feed is transmitted to each roller.

Adjustment Standard: 1.2 to 1.8 mm

1. Lower the paper table [A].
2. Remove the master making unit cover (5 screws).
3. Remove the front and rear grounding plates of the master making unit (2 screws each).
4. Remove the bracket (2 screws) covering the scanner unit safety switch harness.
5. Remove the master making unit [B] (2 screws [C] and 4 connectors [D]).
6. Using a tension gauge, apply a 110-gram load to the center of the belt [E]. Make sure that the belt deflects 1.2 to 1.8 mm.
7. If it does not, adjust the master feed motor position (2 screws [F]).

4.3 RIGHT AND LEFT CUTTER SWITCHES ADJUSTMENT

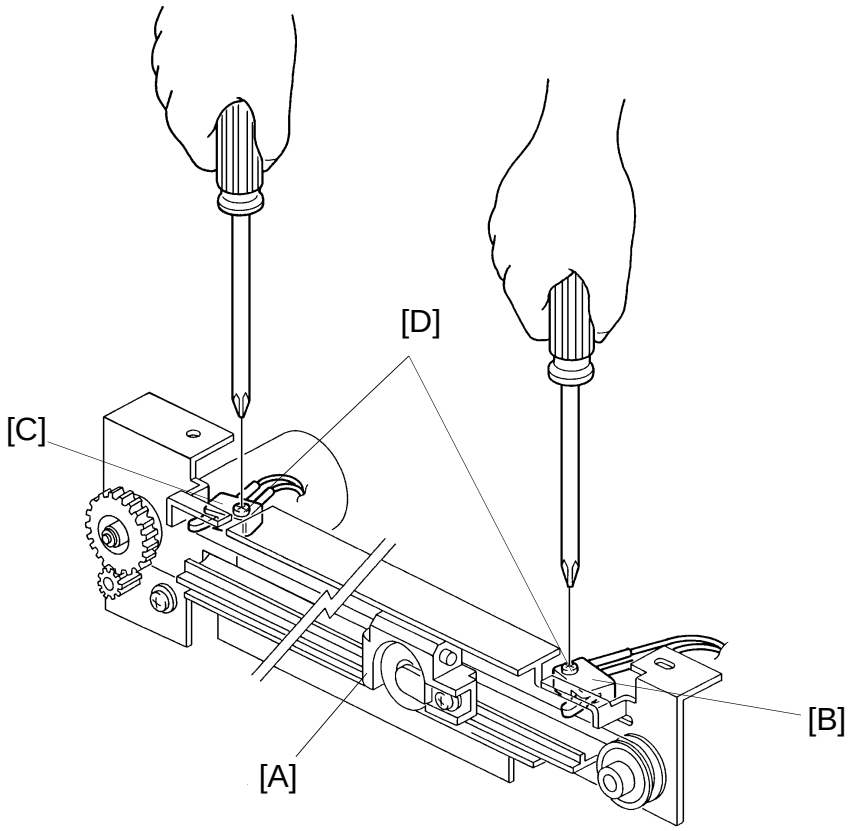

C223R606.img

Purpose: To ensure that the cutter slider stops properly.

Adjustment Standard: Confirm that the cutter holder activates the switches.

Replacement Adjustment

1. Remove the cutter unit. (See Cutter Unit Removal.)
2. After moving the cutter holder [A] fully to the left, make sure that the left cutter switch [B] is turned on. Make sure that the right cutter switch [C] is also turned on when the cutter is moved fully to the right.
3. If not, loosen the mounting screws [D] and adjust the switch position.

4.4 THERMAL HEAD ALIGNMENT ADJUSTMENT

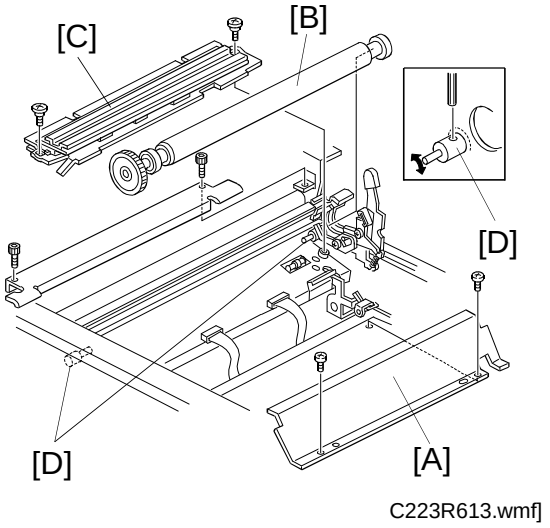

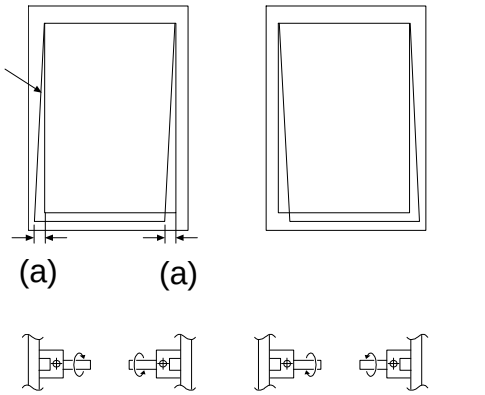

Purpose: To make sure that the original image is correctly reproduced without skew.

1. Remove the master box, thermal head cover [A] (2 screws), platen roller gear cover (1 screw), platen roller [B], and the thermal head [C] (2 screws).
2. Loosen the Allen screws securing the front and rear thermal head positioning pins [D].
3. Turn the front or rear thermal head positioning pin. Then turn the other in the opposite direction in the same amount.

   NOTE: If the front and rear thermal head pins are turned through one unit on the scale printed above the pin, the image skew amount (a) is corrected by 0.3 mm.
4. Tighten the Allen screws and reassemble the machine.
5. Make a new master and check if the image skew is corrected.

4.5 CUTTER UNIT REMOVAL

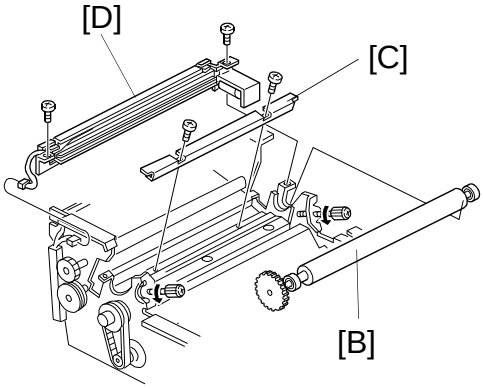

C223R596.wmf

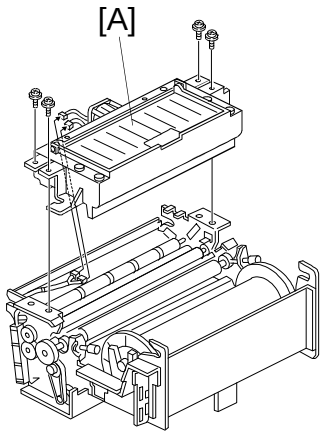

C223R597.wmf

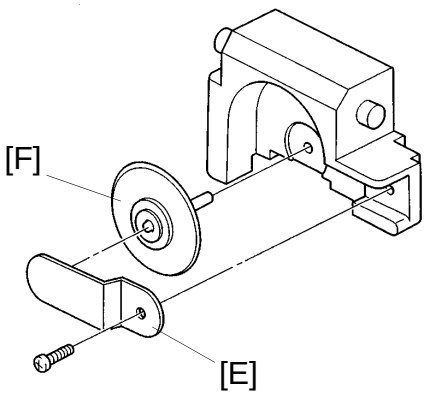

C223R604.img

NOTE: Be careful not to damage the thermal head.

1. Lower the paper table.
2. Remove the master making unit. (See Belt Tension Adjustment.)
3. Remove the master box [A] (4 screws).
4. Remove the platen roller [B] (2 knob screws).
5. Remove the thermal head guide plate [C] (2 screws).
6. Remove the cutter unit [D] (2 screws).
7. Remove the holder plate [E] (1 screw) and remove the cutter blade [F].

⚠WARNING:
Do not touch the edge of the cutter blade with bare hands.

4.6 THERMAL HEAD REMOVAL

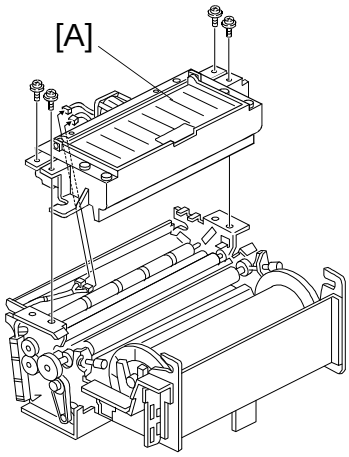

C223R597-2.wmf

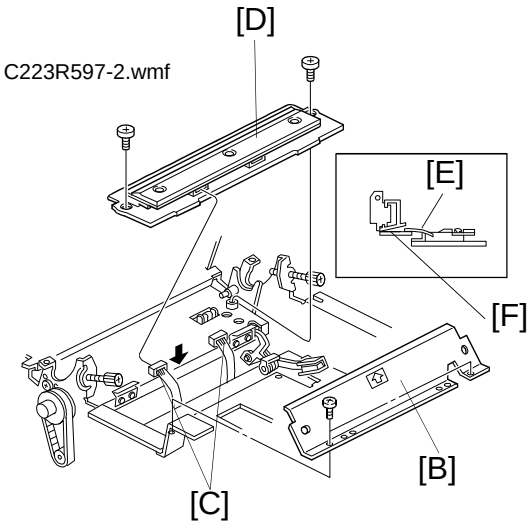

C223R598.wmf

1. Slide the scanner unit to the left.
2. Remove the master box [A] (4 screws).
3. Remove the platen roller and remove the master roll.
4. Remove the thermal head cover [B] (2 screws).
5. Disconnect the two thermal head connectors [C].
6. Remove the thermal head [D] (2 screws).

NOTE: 1. When replacing the thermal head, make sure the thermal head guide plate [E] is positioned above the lower cutter unit guide plate [F].
2. Make sure neither of the connectors are loose before reassembling the machine.

4.7 THERMAL HEAD DRIVE PCB REMOVAL

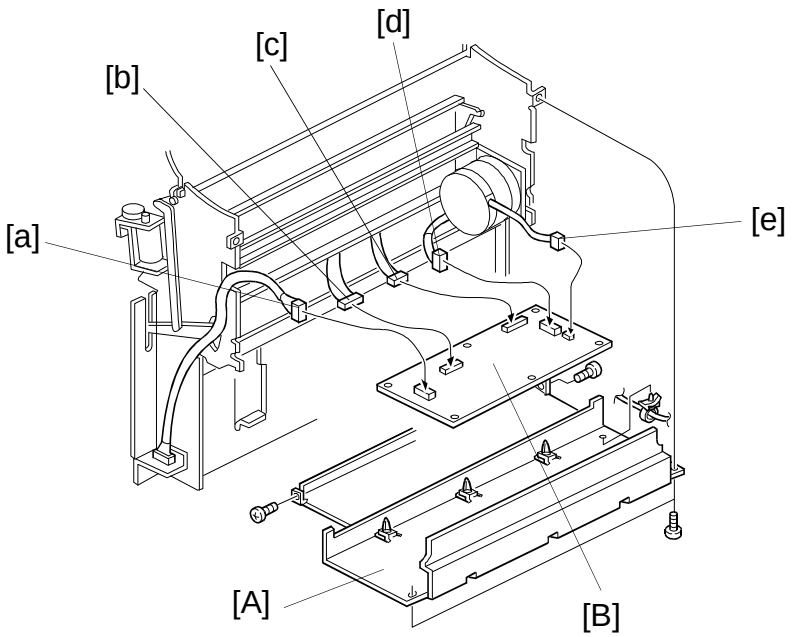

C223R599.wmf

1. Remove the master making unit.
2. Open the bottom plate [A] of the master making unit (2 screws).
3. Disconnect the 5 connectors (a to e).
4. Remove the thermal head drive PCB [B] (6 locking supports).

5. MASTER EJECT

5.1 MASTER EJECT SENSOR ADJUSTMENT

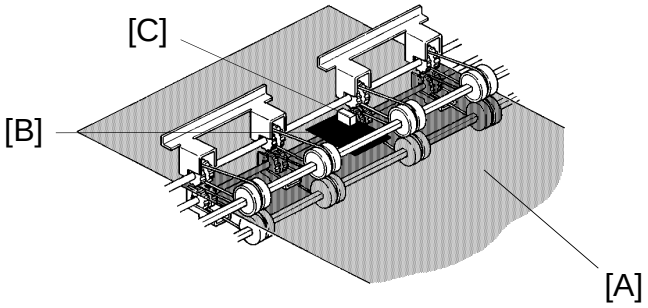

C223R528.img

Purpose: To ensure that the sensor [A] detects the ejected master.

Adjustment Standard: 0.8 to 0.9 V when no master is detected.

1. Make a master that has a solid black area as follows. The solid black area should be about A7 size (74 x 105 mm/3" x 4"). Using a solid black test master ensures that the sensor is tested under the worst case condition.
   a. Put the original with the solid black area on the original table.
   b. Make some prints.
   c. Stop printing when the image density of the solid black area on the print stabilizes.
   d. Take out the drum unit and master eject box, and remove the master from the drum.

   NOTE: To prevent the thermal head from overheating, do not use a large solid black original.

2. Put back the drum unit and the master eject box.

3. Access SP mode and select SP No.137. Then press the Print Start key. The master eject sensor voltage is displayed.

   NOTE: The voltage can also be checked using TP104 (master eject sensor output) and TP107 (GND).

4. Confirm that the voltage is 0.8 to 0.9 V when the master is not under the master eject sensor.

5. If it is not, adjust it by turning VR104 on the main PCB.

6. After adjusting, insert the master [A] between the upper and the lower eject rollers with the master film side up and position the solid black area [B] under the sensor [C]. Then confirm that LED104 turns on.
   If the sensor does not respond, the sensor or the main PCB is defective, or the two components may be disconnected.

5.2 MASTER EJECT SOLENOID POSITION ADJUSTMENT

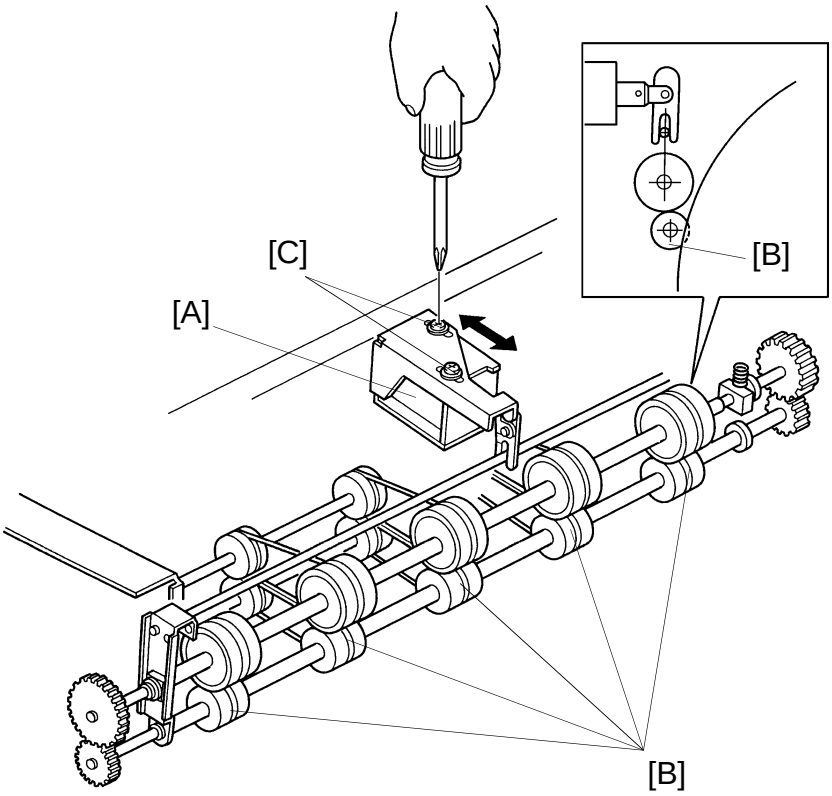

C223R529.img

Purpose: To ensure that the master is ejected.

1. Open the master eject unit and remove its upper cover (4 screws).
2. Make sure that the lower rollers [B] touch the drum surface when the solenoid [A] is on, and that they do not touch when the solenoid is off. To energize the solenoid, use output check mode (SP131) No.17.
3. If the rollers are not adjusted correctly, loosen the screws [C] and adjust the mounting position of the master eject solenoid [A].
4. After adjusting, retighten the screws [C].

   NOTE: To check if the lower roller touches the drum surface, wrap the drum with blank paper. Then check the paper for roller marks.

5.3 AIR KNIFE MOTOR SAFETY SWITCH ADJUSTMENT

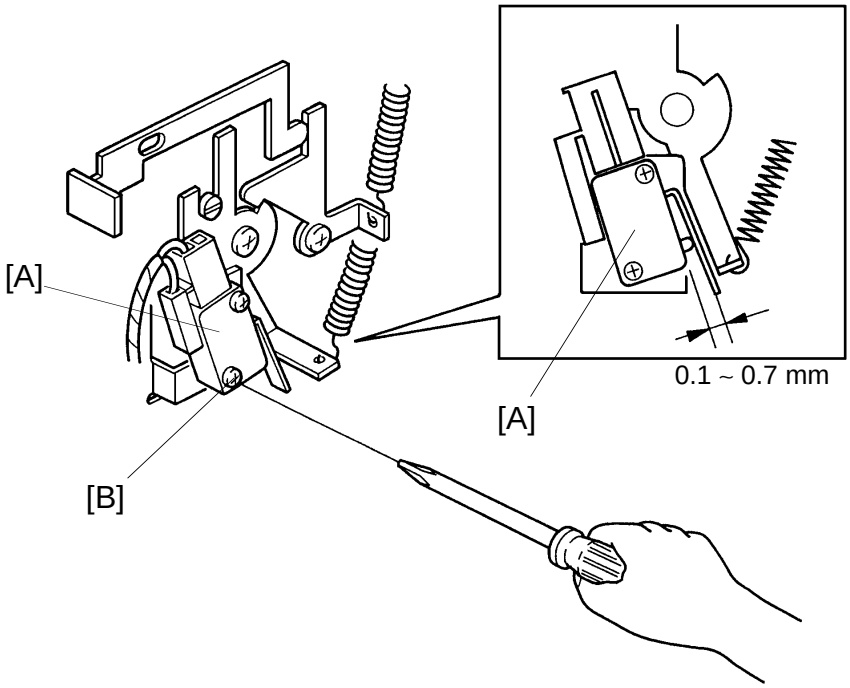

C223R530.img

Purpose: To ensure that the safety switch turns on and stops the air knife motor when the master eject unit is opened.

Adjustment Standard: 0.1 to 0.7 mm

1. Open the front door, then remove the right front cover and inner cover.
2. Confirm that the safety switch [A] turns off when you open the master eject unit.
3. Confirm that the distance between the safety switch and the actuator is 0.1 ~ 0.7 mm when the master eject unit is closed.
4. If it is not, loosen the screw [B] and adjust the position of the switch [A].
5. After adjusting, tighten the screw [B] and check the function of the safety switch again.

5.4 MASTER EJECT UNIT REMOVAL

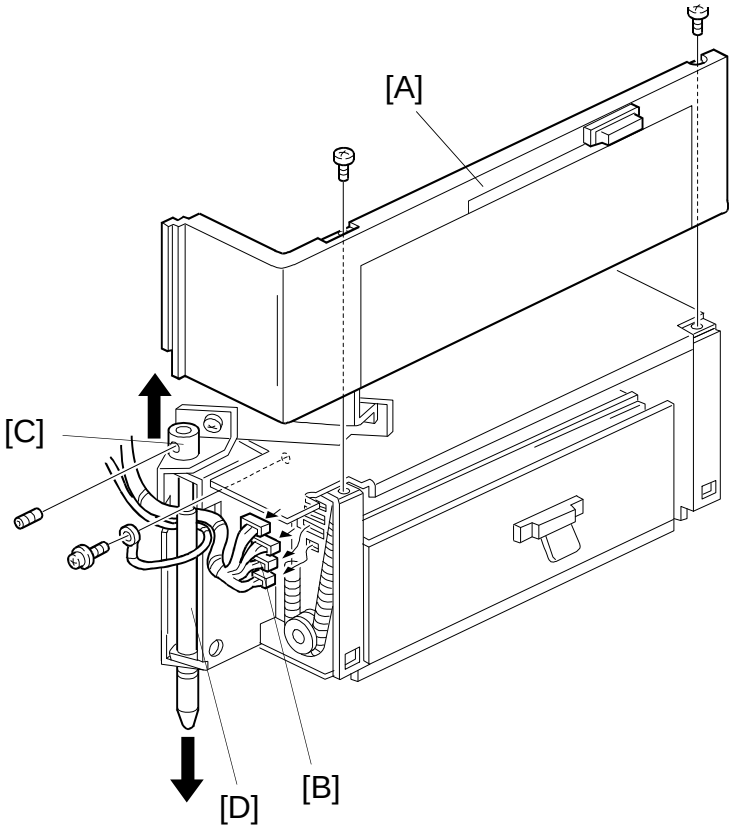

C223R531.img

1. Remove the rear cover (7 screws).
2. Remove the master eject unit cover [A] (2 screws).
3. Disconnect the 4 connectors [B].
4. Remove the guide shaft stopper [C] (1 Allen screw).
5. While supporting the master eject unit, slide out the guide shaft [D].

   NOTE: Be careful not to drop the master eject unit.

5.5 MASTER EJECT SENSOR REMOVAL

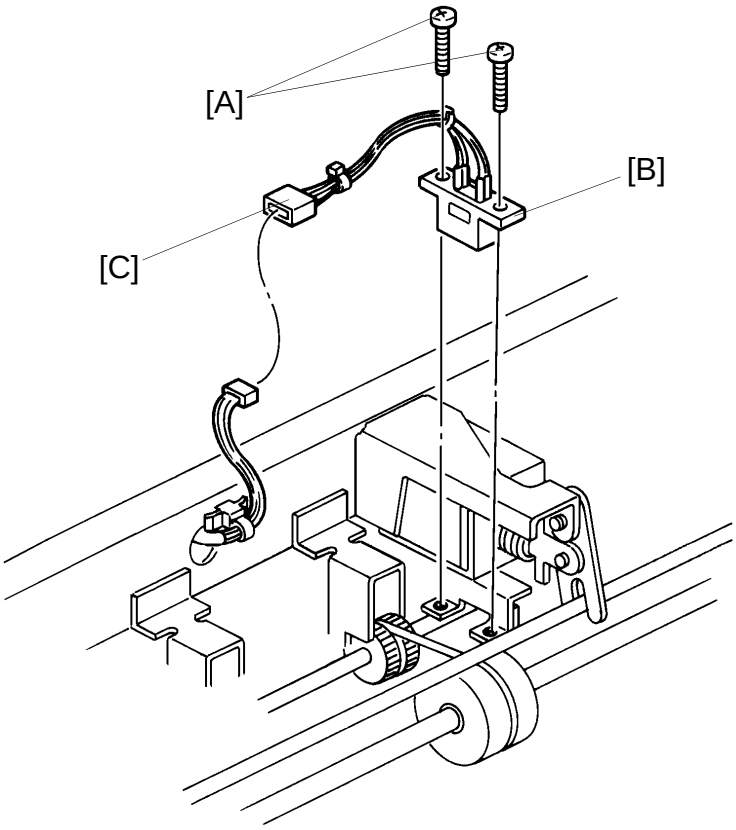

C223R532.img

1. Remove the master eject unit.
2. Remove the upper master eject unit cover.
3. Remove the 2 screws [A].
4. Disconnect the connector [C] and remove the master eject sensor [B].

5.6 MASTER EJECT BELTS/ROLLERS REMOVAL

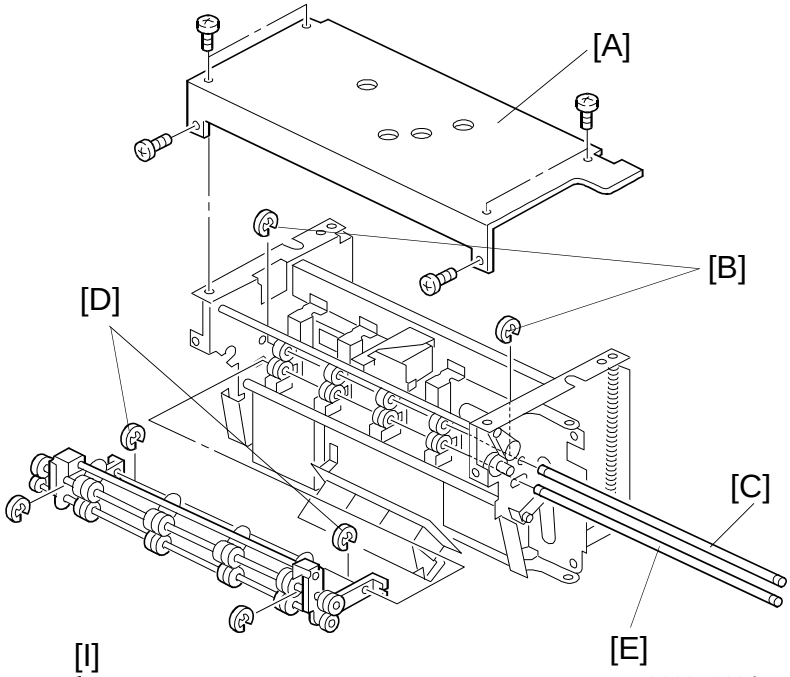

C223R603.img

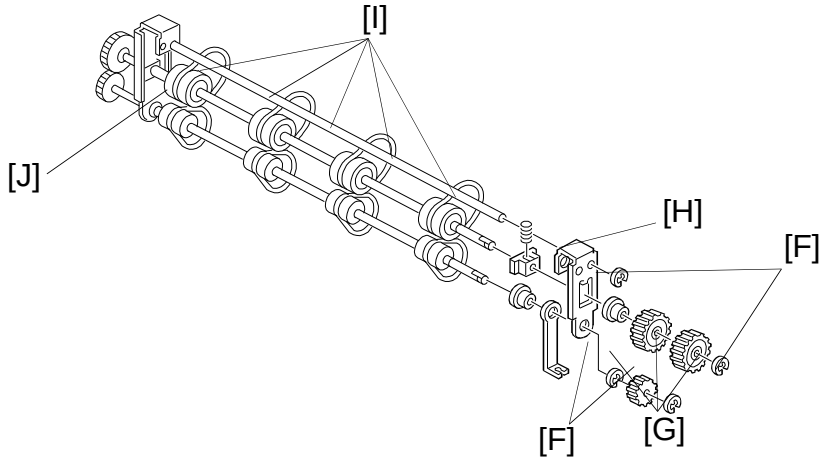

C223R602.img

1. Remove the master eject unit.
2. Remove the unit cover [A] (6 screws).
3. Remove the 2 E-rings [B] and remove the upper pulley shaft [C].
4. Remove the 2 E-rings [D], take out the shaft [E], and remove the roller unit from the master eject unit.
5. Remove the 4 E-rings [F] and 3 gears [G].
6. Remove the supporter [H].
7. Remove the 8 belts [I].
8. Remove the rubber rollers [J].

6. PAPER FEED

6.1 PAPER TABLE OPEN SWITCH ADJUSTMENT

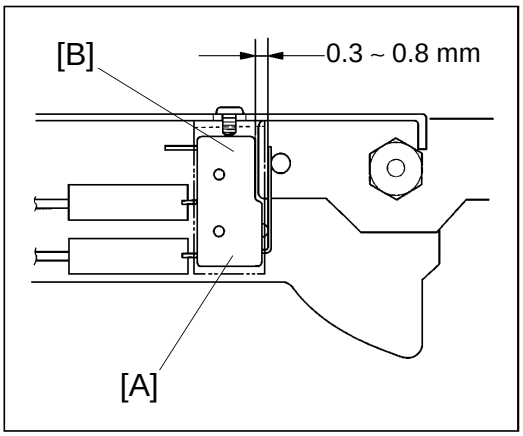

C223R535.img

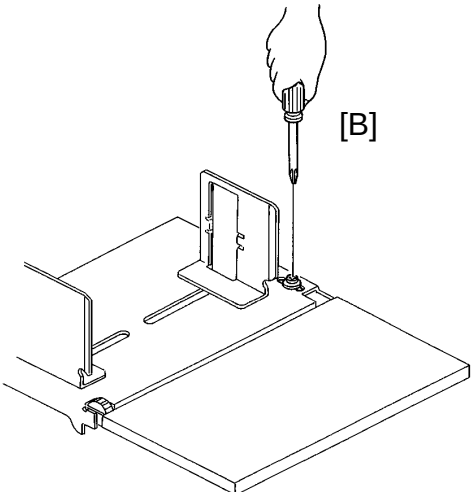

C223R536.img

Purpose: To ensure that the paper table open switch turns on to prevent the paper table from going up when the paper table is closed.

Adjustment Standard: 0.3 to 0.8 mm

1. Make sure that the switch [A] turns off when the paper table is opened and that it turns on when the paper table is closed.
2. If this is not the case, loosen the screw [B] and adjust the switch bracket position.
3. After adjustment, repeat step 1.

6.2 PAPER TABLE HEIGHT ADJUSTMENT

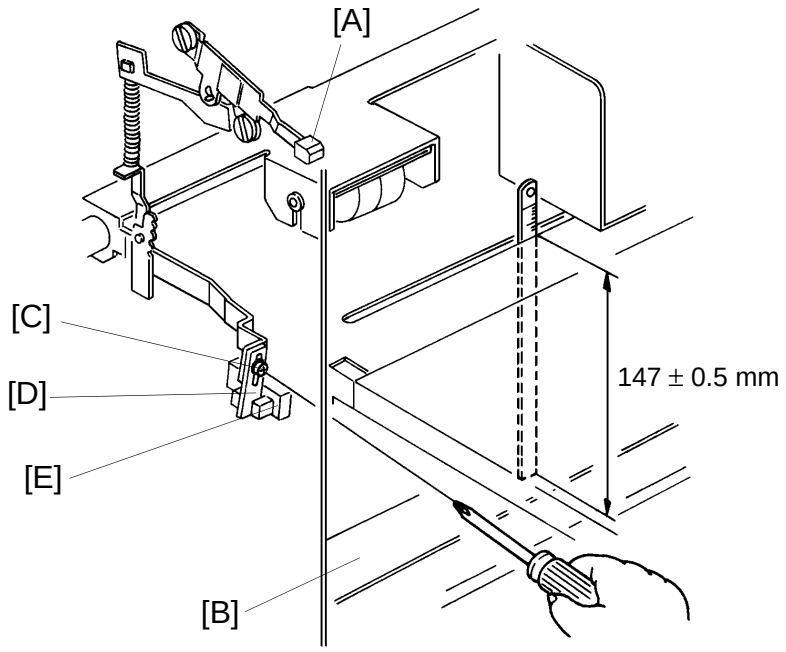

C223R537.img

Purpose: To ensure smooth paper feed.

Adjustment Standard: 147 ± 0.5 mm

1. Set the paper feed pressure adjusting lever [A] to the upper position.
2. Remove the right cover of the machine (5 screws).
3. Turn on the main switch and access the service program mode.
4. Select output check mode (SP131) No. 19, and press the Print Start key to raise the table.
5. After the paper table stops, insert a scale into the slot at the end of the paper table. Make sure that the distance between the lower stay [B] and the upper face of the table is between 146.5 and 147.5 mm.
6. If it is not, loosen the screw [C] and adjust the position of the actuator [D].
7. After adjusting, repeat step 5 by lowering the paper table (use output No. 18) and raising the paper table (use output No. 19) several times, checking the height each time.

   NOTE: When mounting the actuator, make sure that the actuator [D] does not touch the paper table height sensor [E].

6.3 PAPER FEED ROLLER PRESSURE ADJUSTMENT

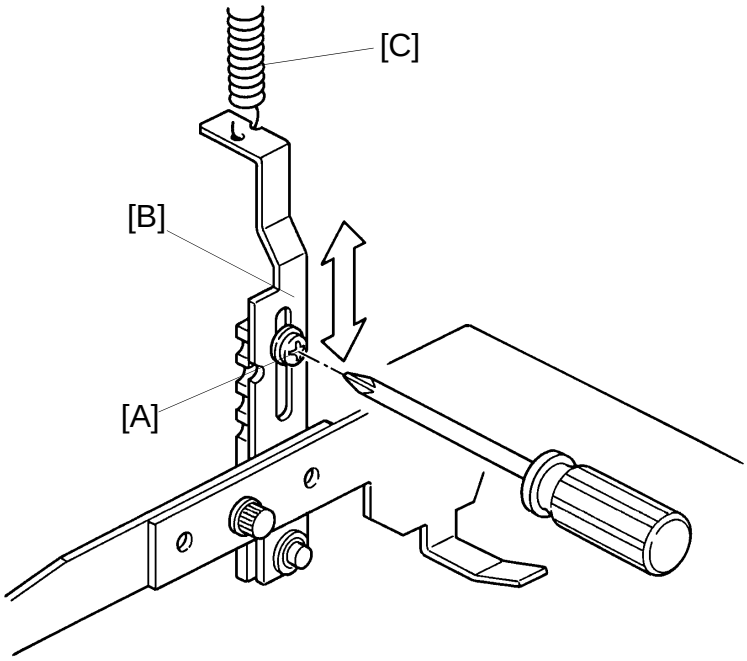

C223R610.img

Purpose: To ensure that the paper feed roller exerts sufficient pressure for a smooth paper feed (for a printing paper weight range of 50 g/m^2 to 215 g/m^2).

NOTE: 1. If paper isn't feeding properly or isn't feeding at all, follow procedure 1. If procedure 1 fails to correctly adjust the feed roller pressure, follow procedure 2 (next page).

2. After replacing the paper feed pressure spring [C], follow procedure 2 to adjust the roller pressure.

— Procedure 1 —

1. Loosen the screw [A] securing the lower adjustment plate [B].

   NOTE: When loosening the screw [A], hold the lower adjustment plate [B] in the original position for a fine adjustment.

2. Adjust the paper feed roller pressure by moving the lower adjustment plate [B] up or down.

   Up to increase the pressure
   Down to reduce the pressure

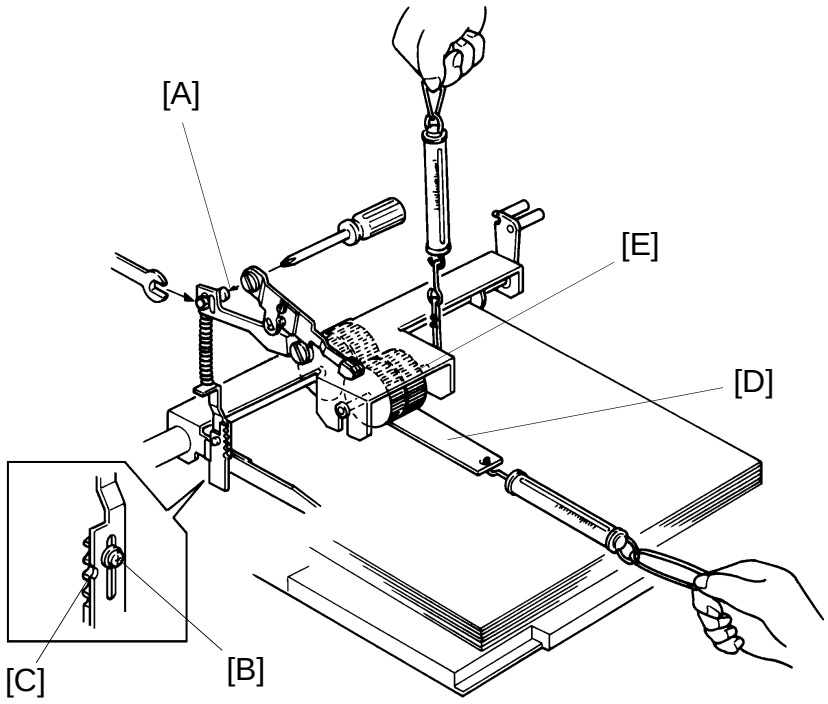

C223R611.img

— Procedure 2 —

This procedure should only be used when the proper pressure cannot be achieved with procedure 1.

1. Remove the master making unit.
2. Move the lever for adjusting the paper feed roller pressure to the upper position.
3. Remove the right front cover, main PCB, and image processing PCB.
4. Manually rotate the paper table drive gear to raise the paper table to the paper feed position. (The paper table height sensor is interrupted.)
5. Align the lower adjustment plate notch with the center notch of the link [C] and tighten the screw [B].
6. Hook a tension gauge (500-gram range) to the paper feed roller shaft [E]. Insert a strip of paper [D] between the paper feed roller and the sheets of paper. Then hook a tension gauge (100-gram range) to the paper strip and apply a 100-gram load. Now gradually pull up the tension gauge hooked to the shaft and make sure that the paper strip can be pulled out when the tension gauge shows 250 ± 5 grams.
7. If this is not the case, adjust the pressure by moving the mounting position of the shaft [A].

6.4 LOWER GUIDE PLATE ADJUSTMENT

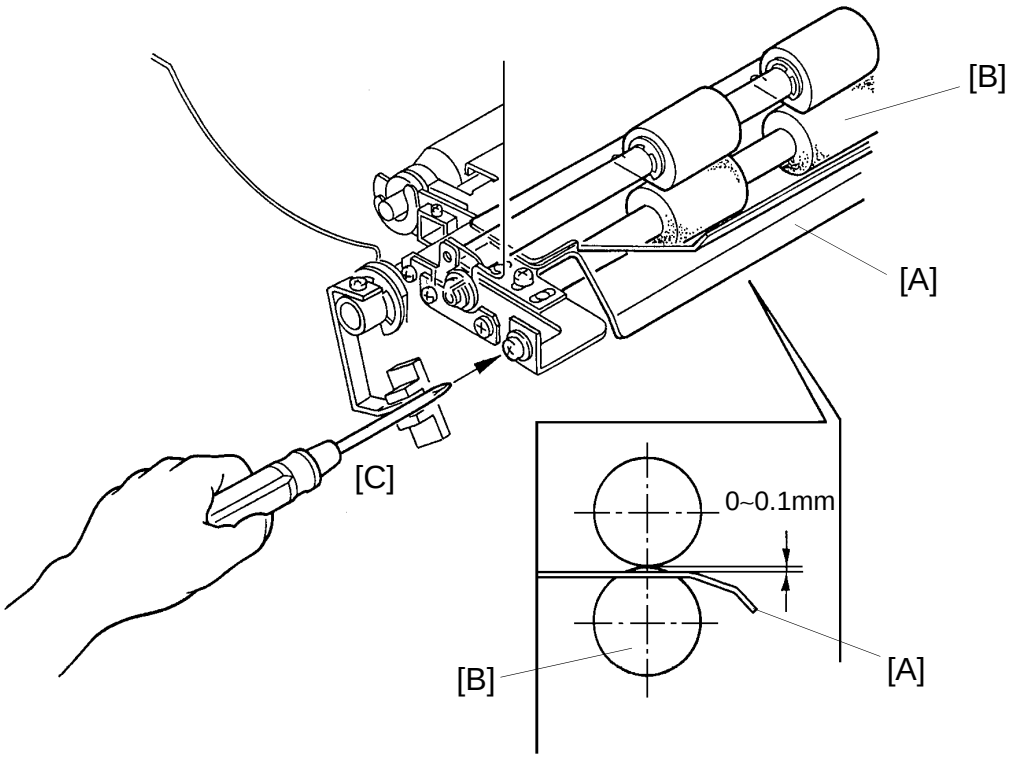

C223R517.img

Purpose: To ensure smooth paper feed, and to prevent paper jams, folding, and wrinkling.

Adjustment Standard: 0 to 0.1 mm

1. Make sure that the distance between the lower guide plate [A] and lower second feed roller [B] is between 0 and 0.1 mm as shown.
2. If it is not, remove both the front and rear covers and loosen the screw [C] (front and rear, one each). Then, adjust the position of the guide plate [A].
3. After adjustment, retighten the screw [C].

6.5 SEPARATION PLATE PRESSURE ADJUSTMENT

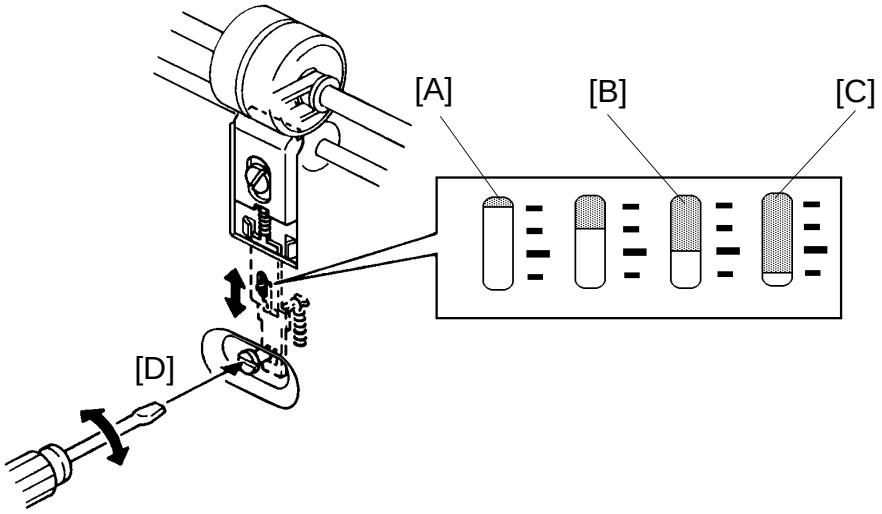

C223R540.img

[A]: Strong
[B]: Factory Setting
[C]: Weak

Purpose: To adjust the separation plate pressure to suit the type of paper being used by the customer.

Adjustment Standard: See the above illustration.

1. Adjust the separation plate pressure by turning the adjustment screw [D].

   NOTE: Position the groove on the screw head vertically or horizontally . Otherwise, vibrations may cause the screw to turn.

2. After adjusting, make some copies to check that the paper feeds smoothly without jamming, folding, or wrinkling. Use all the types of paper that the customer uses.

Replacement Adjustment

6.6 FEED LENGTH OF THE PAPER FEED ROLLER ADJUSTMENT

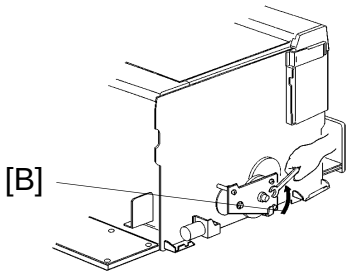

D223R541.img

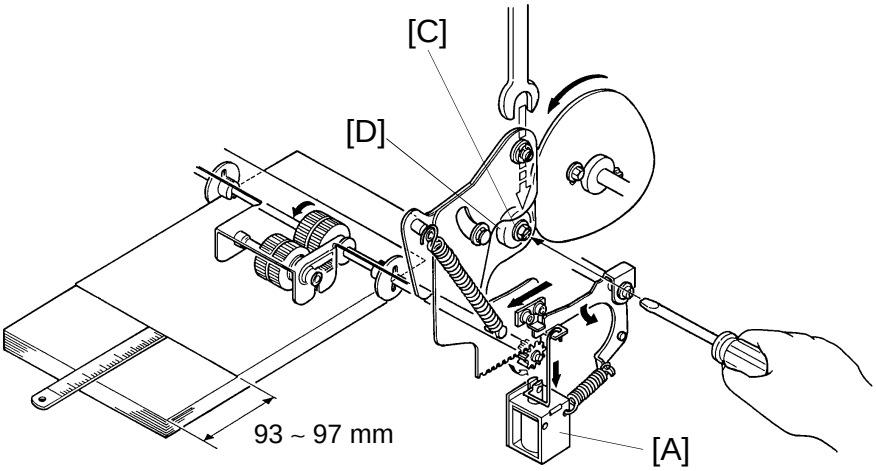

C223R542.img

Purpose: To ensure paper feed to the second paper feed roller.

Adjustment Standard: 93 to 97 mm

1. Stack about 100 sheets of paper on the paper table.
2. Set the lever for adjusting the paper feed roller pressure to the up position.
3. Remove the rear cover.
4. Turn on the paper feed solenoid [A] manually. Then, turn the rollers counterclockwise by rotating the shaft [B] with a 10 mm spanner.
5. Measure the length of paper fed. Measure from the time the paper feed roller starts rotating until it stops rotating. This feed length should be between 93 and 97 mm.
6. If it is not, adjust the feed length by loosening the hexagon nut [C] mounted on the sector gear. Then shift the bearing [D] up or down.
7. After adjusting, repeat steps 5 and 6.

6.7 PAPER FEED SECTOR GEAR STOPPER CLEARANCE ADJUSTMENT

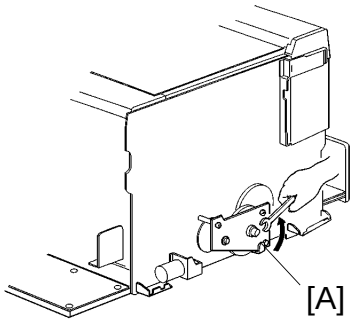

C223R541-2

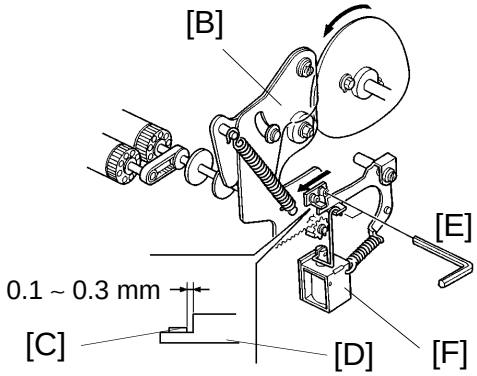

C223R544.img

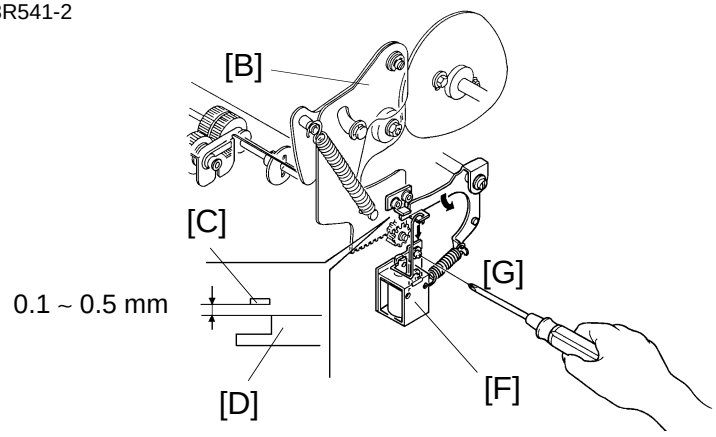

C223R545.img

Purpose: To ensure that the paper feed roller starts rotating when the paper feed solenoid turns on and stops rotating when the paper feed solenoid turns off.

Adjustment Standard: See the above illustrations.

1. Remove the rear cover.
2. With a 10 mm spanner, gradually turn the shaft [A] counterclockwise.
3. When the sector gear [B] fully turns clockwise, make sure that the clearance between the pin [C] and sector gear stopper [D] is between 0.1 and 0.3 mm.
4. If it is not, loosen the hexagon bolt [E] and adjust the clearance by shifting the sector gear stopper [D].
5. Push down the plunger of the paper feed solenoid [F] by hand. Make sure that the clearance between pin [C] and stopper [D] is between 0.1 and 0.5 mm.
6. If it is not, loosen the screw [G] and adjust it by shifting the bracket for the solenoid [F] up or down.

6.8 SECOND FEED ROLLER SECTOR GEAR STOPPER CLEARANCE ADJUSTMENT

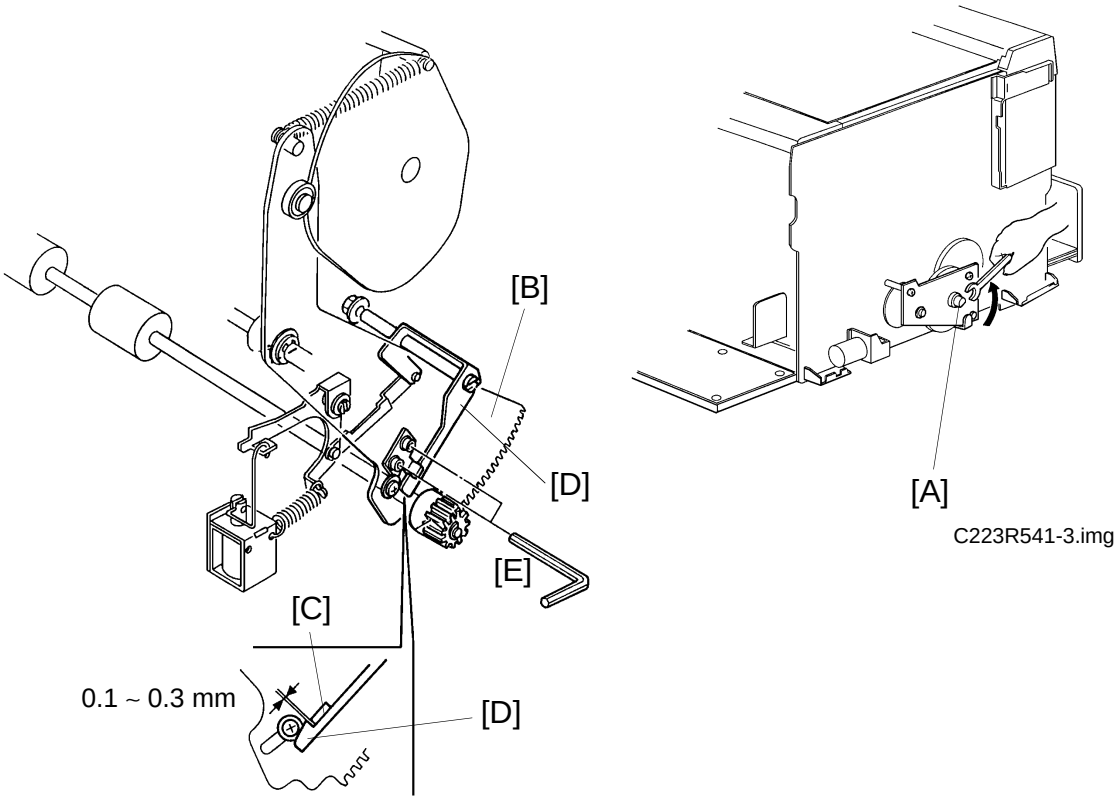

C223R547.img

Purpose: To ensure that the second feed roller starts rotating when the paper feed solenoid turns on and stops rotating when the paper feed solenoid turns off.

Adjustment Standard: 0.1 to 0.3 mm

1. Remove the rear cover of the machine.
2. Gradually turn the drum rotation shaft [A] counterclockwise with a 10 mm spanner.
3. Turn the sector gear [B] counterclockwise until it stops. Make sure that the clearance between the pin [C] and the sector gear stopper [D] is between 0.1 and 0.3 mm.
4. If it is not, loosen the Allen screws [E] and adjust the clearance between the pin and the sector stopper.
5. Retighten the screws [E].

6.9 FEED LENGTH OF THE SECOND FEED ROLLER ADJUSTMENT

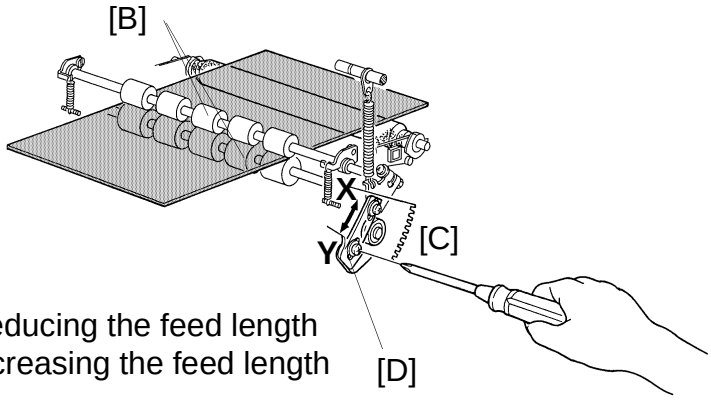

X: Reducing the feed length
Y: Increasing the feed length

C223R549.img

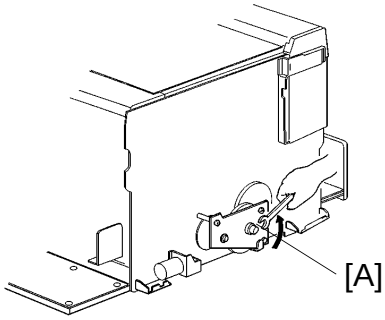

C223R541-4.img

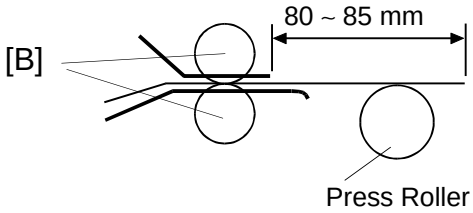

C223R548.img

Purpose: To ensure proper paper feed by the second feed rollers.

Adjustment Standard: 80 to 85 mm

1. Stack about 100 sheets of paper on the paper table.
2. Set the paper table in the paper feed position. (Use output check mode (SP131) No. 19.) Then, turn the main switch off and unplug the machine.
3. Remove the drum unit and the rear cover from the machine.
4. Turn on the paper feed solenoid manually. Then, gradually turn the drum rotation shaft [A] with a 10 mm spanner.
5. Measure the paper feed length from the time the second feed roller [B] starts rotating until it stops rotating. This feed length should be between 80 and 85 mm.
6. If it is not, adjust the feed length by loosening the screw [C] and by shifting the cam [D] up or down.
7. Check the adjustment by repeating steps 4 and 5.

6.10 SECOND FEED ROLLER START TIMING

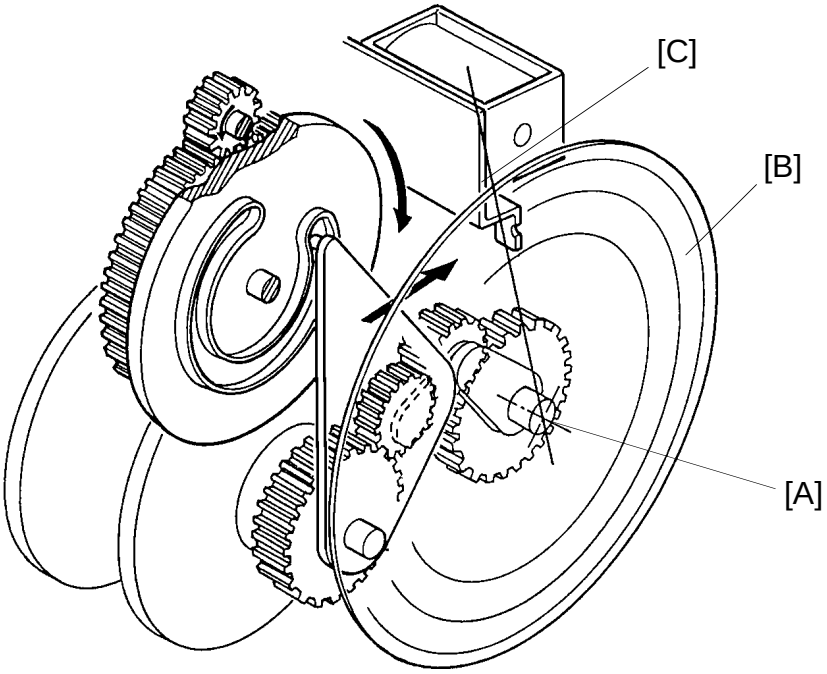

C223R551-1.img

Purpose: To ensure correct paper feed by calibrating the second feed roller start timing, and to adjust the leading edge margin.

Adjustment Standard: 177°

1. Set the Image Position indicator to the "0" position and return the drum to the home position by turning the main switch off and on. Then, turn the main switch off and unplug the machine.
2. Remove the rear cover of the machine.
3. Position a protractor [B] on the end of the image shift shaft [A].

   NOTE: Align the origin of the protractor with the edge of the solenoid bracket [C].

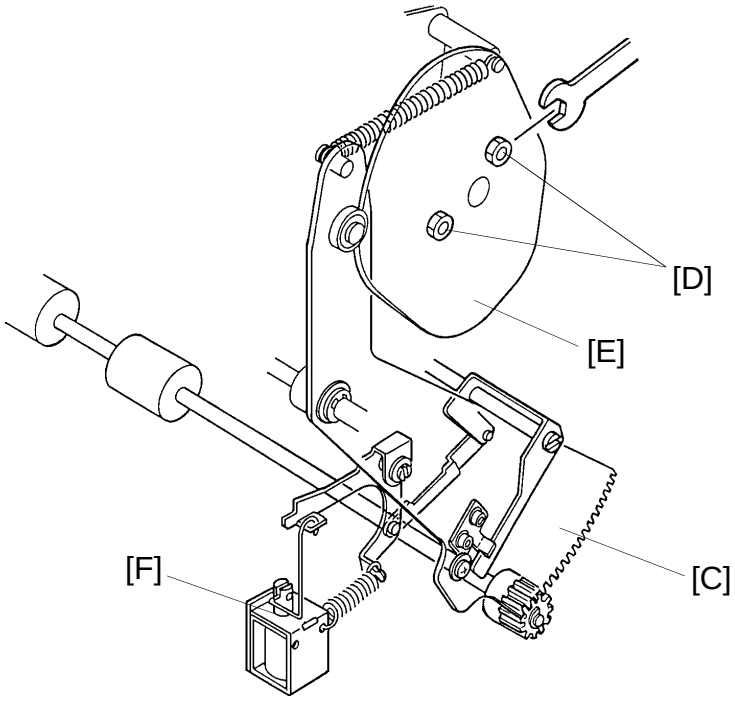

C223R552.img

4. Turn on the paper feed solenoid [F] manually and, using a 10 mm spanner, gradually turn the drum rotation shaft.
5. Measure the degrees turned when the second feed roller sector gear [C] starts returning counterclockwise (when the second feed rollers start rotating). This should be 177°.
6. If it is not, loosen the 2 bolts [D] and adjust the second feed roller rotation timing by turning the cam [E].

6.11 PAPER FEED ROLLER REMOVAL

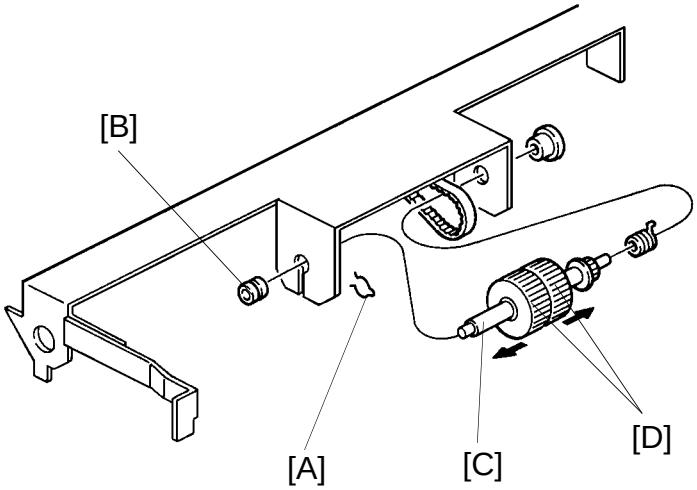

C223R553.img

1. Remove the left clamper [A].
2. Remove the left bushing [B].
3. Remove the paper feed roller shaft [C].
4. Remove the 2 paper feed rollers [D].

6.12 PAPER FEED ROLLER UNIT REMOVAL

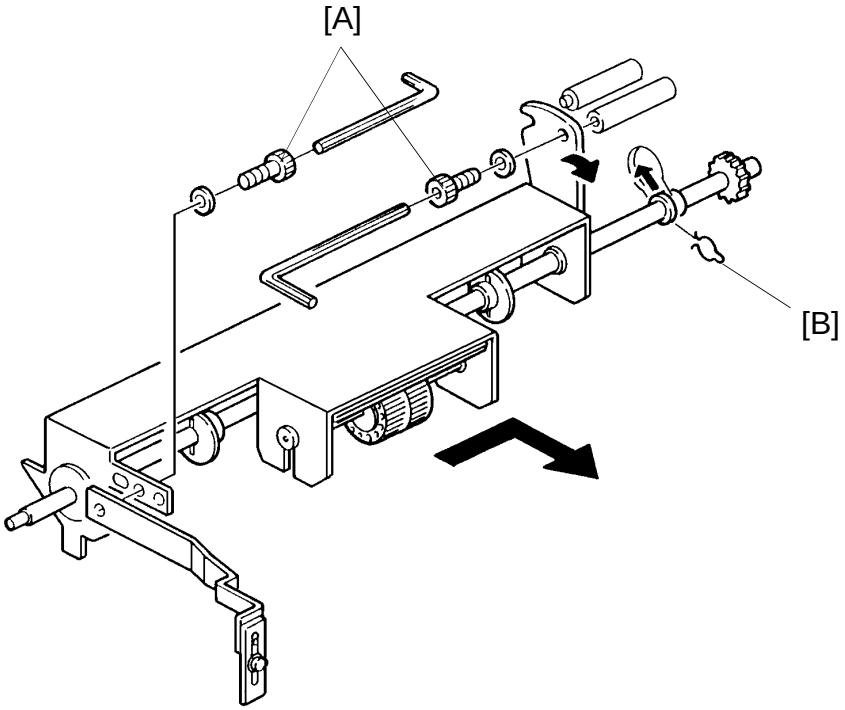

C223R554.img

1. Remove the master making unit.
2. Remove 2 hexagon screws [A].
3. Remove the clamper [B].
4. Remove the paper feed roller unit from the machine by sliding the shaft to the rear.

6.13 UPPER SEPARATION ROLLER REMOVAL

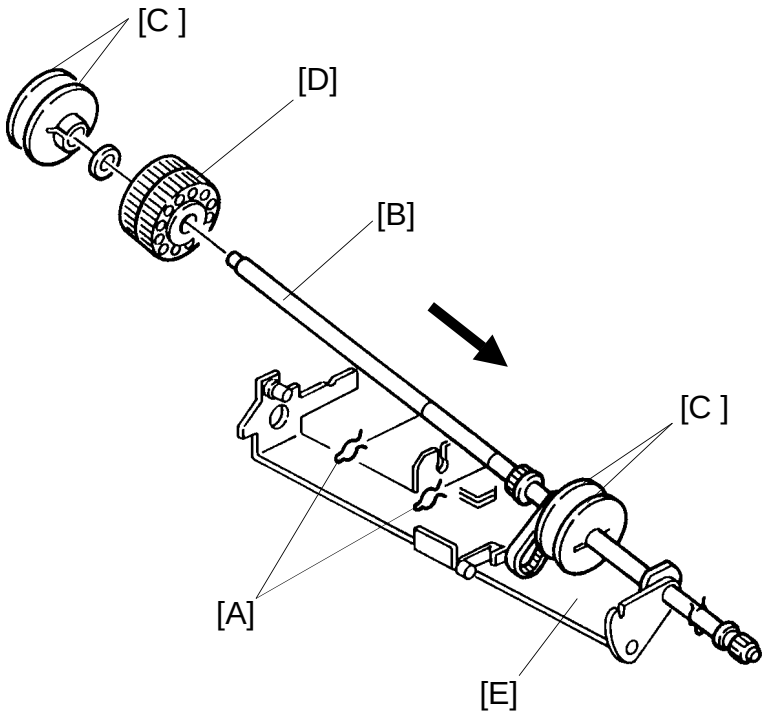

C223R555.img

1. Remove the paper feed roller unit.
2. Remove the clamps [A] from both sides of the upper separation roller.
3. Slide the shaft [B] in the direction of the arrow.
4. Remove the guide disks [C] and remove the upper separation roller [D].

   NOTE: When reassembling the paper feed roller unit, position the guide disks [C] under the cuts in the feed roller holder [E].

6.14 SEPARATION PLATE/LOWER SEPARATION ROLLER REMOVAL

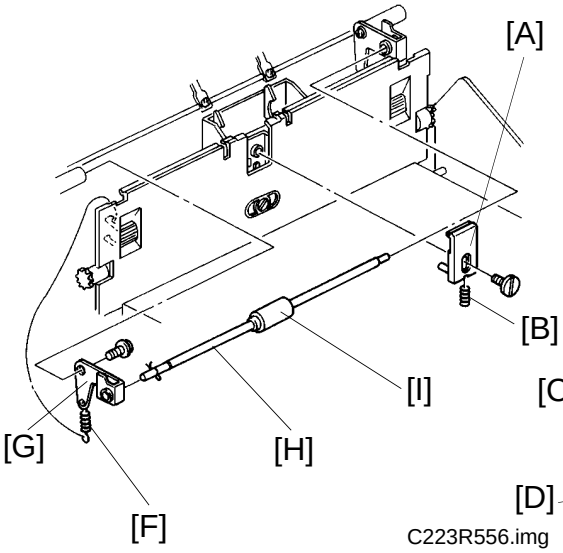

C223R556.img

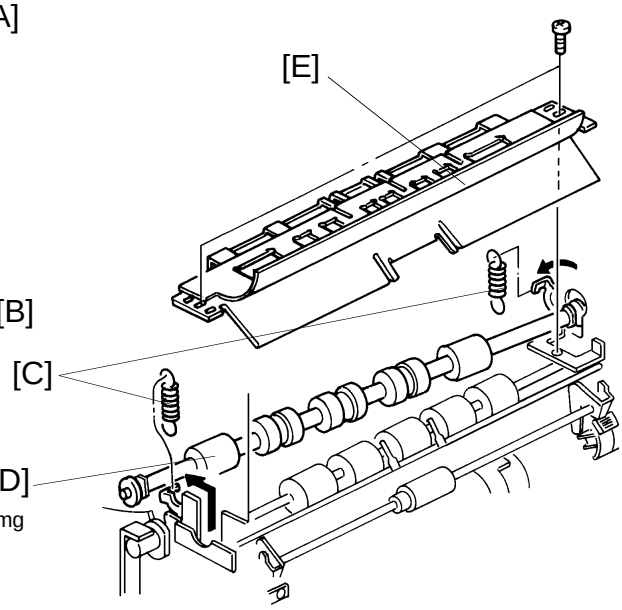

C223R557.img

Separation Plate

1. Remove the separation plate [A] with the spring [B] (1 screw).

Lower Separation Roller

1. Remove the master making unit, paper feed roller unit, and drum unit.
2. Remove the 2 springs [C] and slide the upper second feed roller [D] in the direction of the arrow.

   NOTE: Use a spring hook. That way the spring will not drop into the machine.
3. Remove the upper and lower guide plates [E] (2 screws).

   NOTE: When putting back the guide plates, make sure that the guide plates do not touch the lower second feed roller.
4. Remove the spring [F] hooked on the front separation lever [G].
5. Remove the front separation lever [G] (1 screw).
6. Remove the lower separation roller shaft [H].
7. Remove the lower separation roller [I] from the shaft (one Allen screw).

   NOTE: When reassembling the lower separation roller, confirm that the front and rear separation levers [G] move smoothly.

6.15 PAPER FEED TABLE REMOVAL

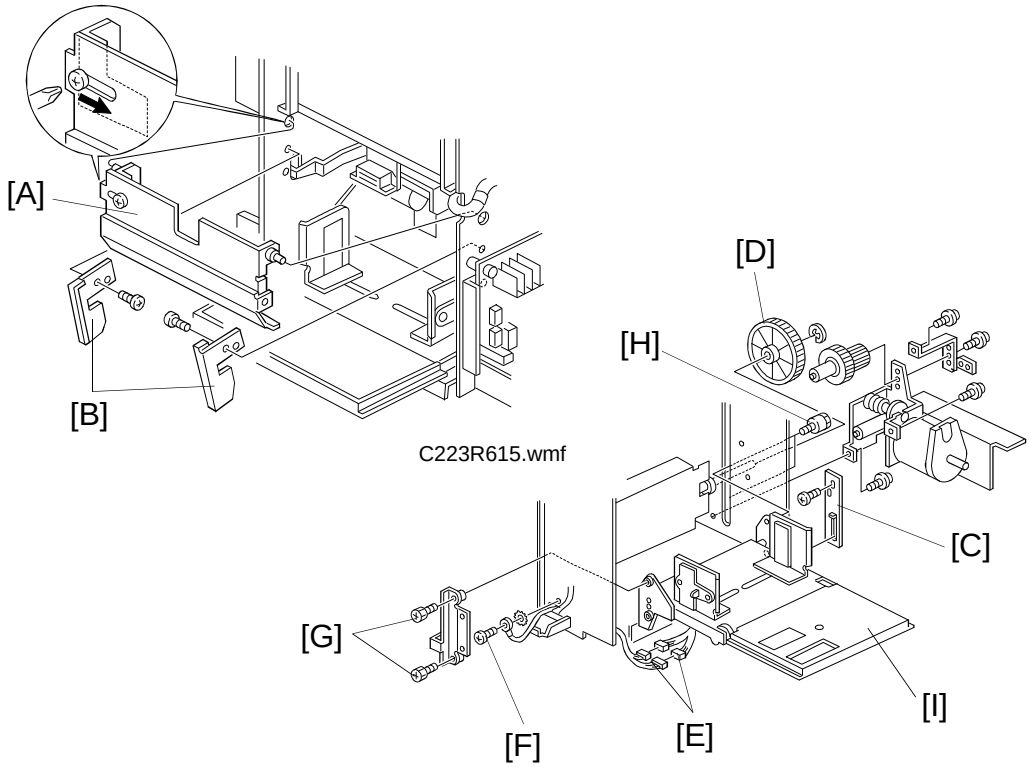

C223R616.wmf

1. Lower the paper table and disconnect the power cord.
2. Remove the right front cover, rear cover, and right cover.
3. Remove the noise reduction cover [A] (1 screw) and two brackets [B] (1 screw each).
4. Remove the plate [C] (1 screw).
5. Remove the paper table drive gear [D] (1 E-ring).
6. Disconnect the two connectors [E] and remove the two screws [F] securing the front and rear grounding wires.
7. Remove the sensor actuator bracket [G] (2 screws) and two studs [H].
8. Remove the paper feed table [I].

   NOTE: When reassembling the machine, make sure that the paper table is level.

7. PRINTING

7.1 PAPER DETECTION ARM CLEARANCE ADJUSTMENT

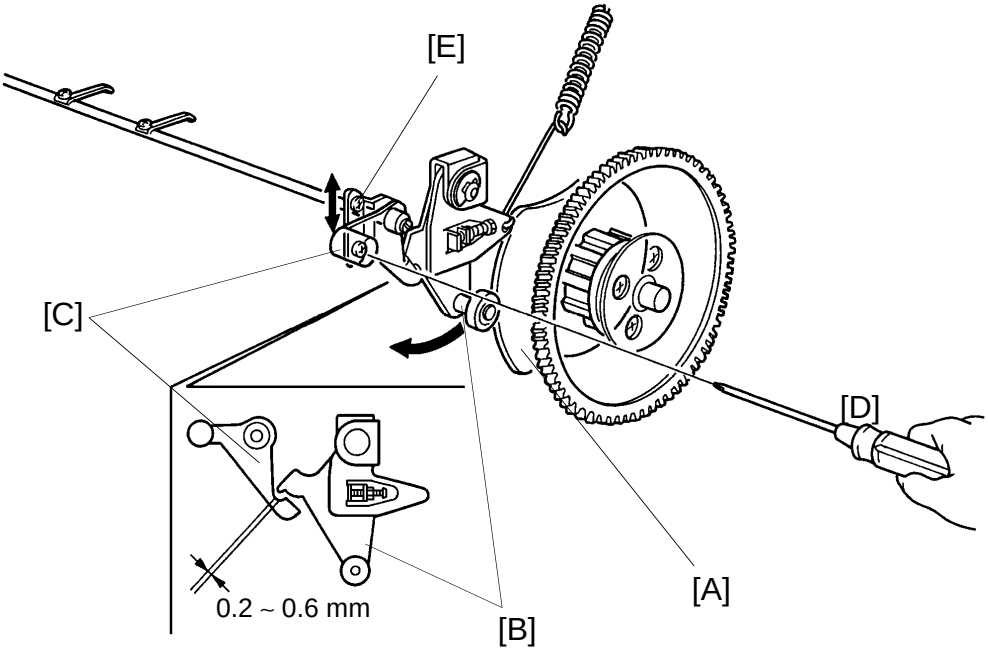

C223R558.img

Purpose: To ensure that printing pressure is applied during paper feed, and is released correctly afterwards.

Adjustment Standard: 0.2 to 0.6 mm

1. Remove the rear cover of the machine.
2. Using a 10 mm spanner, gradually turn the drum rotation shaft counterclockwise to position the bearing of the pressure release arm [B] at the widest part of the pressure cam [A].
3. Make sure that the clearance between the paper detection arm [C] and the pressure release arm [B] is 0.2 to 0.6 mm.
4. If it is not, loosen the screws [D] and adjust the clearance by shifting the paper detection bracket [E] up or down.
5. After adjusting, confirm that the printing pressure on/off mechanism is working properly. To do this, monitor a print run.

7.2 PRESS ROLLER POSITION ADJUSTMENT 1

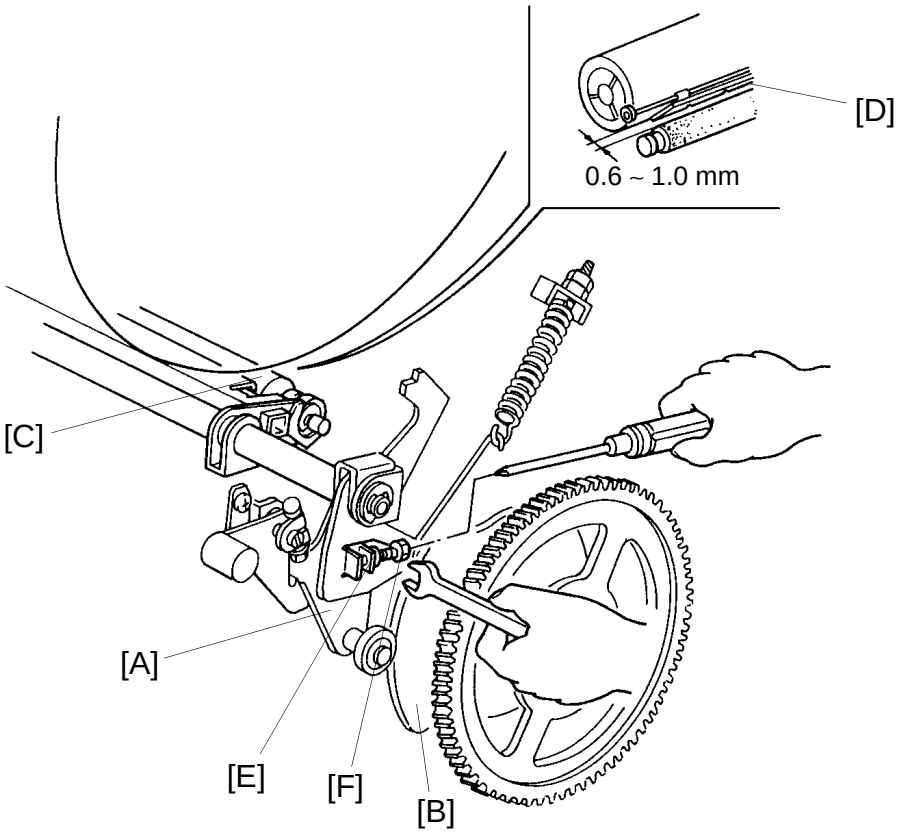

C223R559.img

Purpose: To ensure that the press roller does not touch the clamper section of the drum.

Adjustment Standard: 0.6 to 1.0 mm

1. Remove the rear cover of the machine.
2. Using a 10 mm spanner, turn the drum rotation shaft counterclockwise and position the bearing of the pressure release arm [A] at the widest part of the pressure cam [B].
3. While the arm is at the widest part of the cam, make sure that the distance between the press roller [C] and the tip of the clamper [D] is 0.6 to 1.0 mm.
4. If it is not, loosen the hexagon nut [E] and adjust the clearance by turning the bolt [F].

7.3 PRESS ROLLER POSITION ADJUSTMENT 2 (FOR THE A4/LT DRUM)

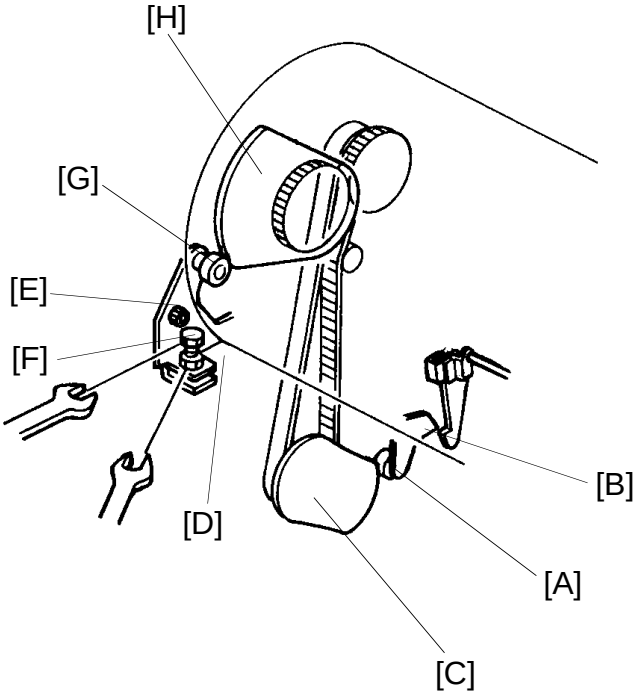

C223R612.img

Replacement Adjustment

Purpose: To keep the distance between the press roller and the drum constant while the printing pressure is released.

NOTE: Perform this adjustment after adjusting the press roller position 1.

1. Remove the master eject unit.
2. Using a 10 mm spanner, turn the drum rotation shaft counterclockwise and position the bearing [A] of the pressure ON/OFF lever [B] on top of the pressure cam [C].
3. Loosen the bolt [D] fixing the arm [E].
4. Adjust the position of the bolt [F] using a 7 mm spanner so that the bearing [G] of the arm just touches the top of the A4 cam [H].
5. Rotate the bearing [G] manually. If there is no friction between the bearing and the cam, turn the bolt [F] clockwise.
6. Retighten the bolt [D].

7.4 PRESSURE TIMING ADJUSTMENT

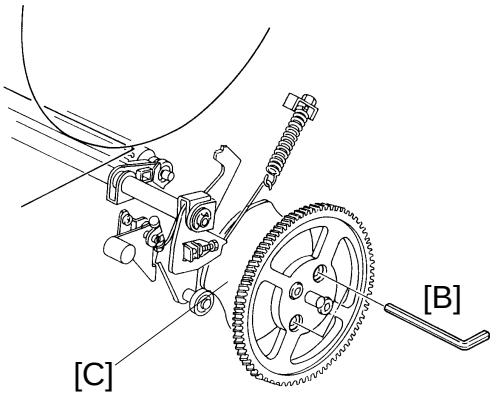

C223R560.img

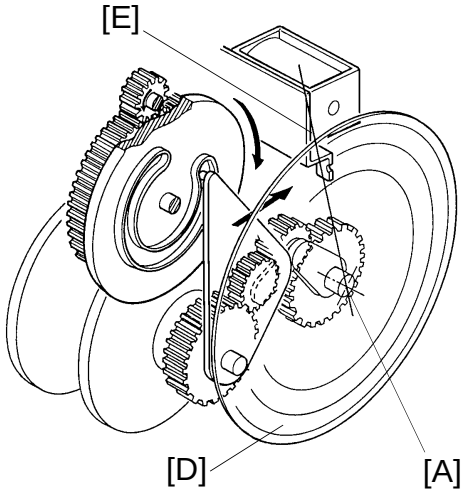

C223R551-2.img

Purpose: To ensure that the maximum printing area is within specifications, and that the ink does not stain the trailing edge.

Adjustment Standard: 218 ± 2°

1. Stack about 100 sheets of paper on the table.
2. Set the Image Shifting indicator to the "0" position and return the drum to the home position by turning the main switch off and on.
3. Set up the paper table in the paper feed position. (Use output check mode (SP131) No. 19.) Turn the main switch off and unplug the machine.
4. Remove the rear cover of the machine.
5. Position a protractor [D] on the end of the image shift shaft [A]. Align the origin of the protractor with the edge of the solenoid bracket [E].
6. Using a 10 mm spanner, turn the drum rotation shaft counterclockwise while pressing in the plungers of the paper feed and printing pressure solenoids by hand.
7. Turn the drum rotation shaft a little further, and stop it when the press roller begins to touch the drum surface.
8. In the above condition, measure the degrees turned; this should be 218 ± 2°.
9. If it is not, loosen the screw [B] of the pressure cam [C] and adjust the pressure timing by turning the cam [C].

7.5 PRINTING PRESSURE ADJUSTMENT

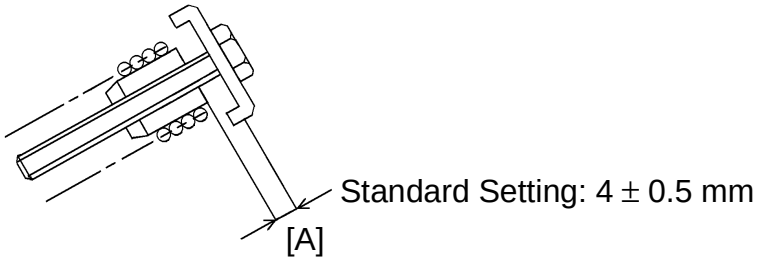

C223R562.img

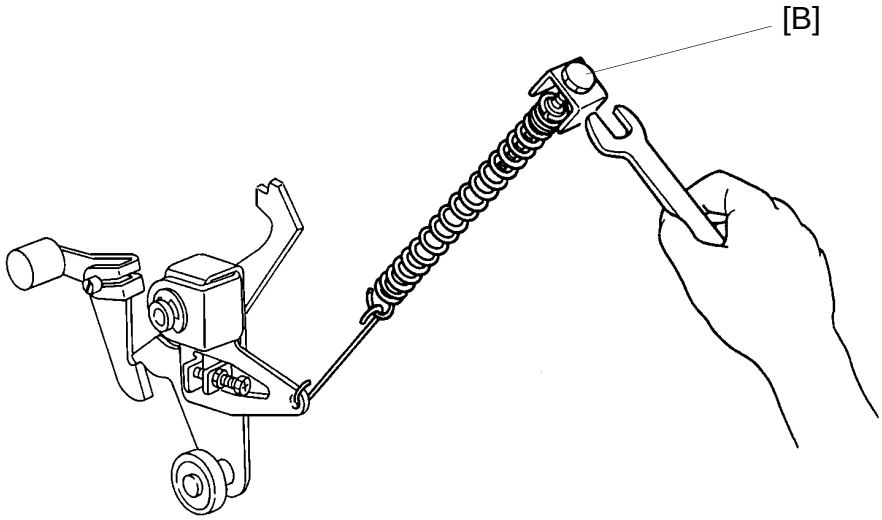

C223R563.img

Replacement Adjustment

Purpose: To apply the proper printing pressure to the press roller.

Adjustment Standard: 4 ± 0.5 mm

1. Remove the rear cover of the machine.
2. Adjust the clearance [A] to 4 ± 0.5 mm by turning the adjustment bolt [B].

7.6 PRINTING PRESSURE SOLENOID CLEARANCE ADJUSTMENT

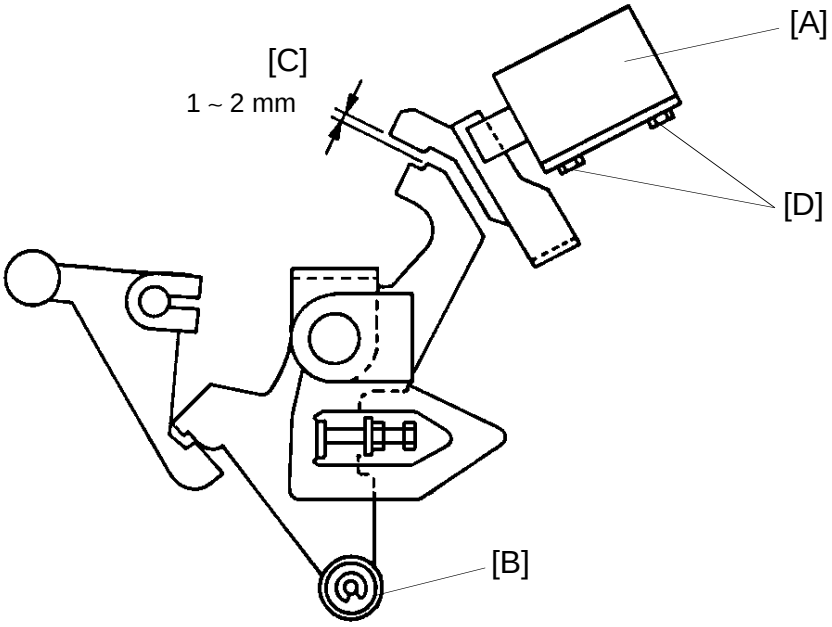

C223R564.img

Purpose: To ensure that the printing pressure stopper is released when paper feed starts, and that the stopper is locked within one drum rotation when a paper jam occurs.

Adjustment Standard: 1 to 2 mm

1. Manually press in the plunger of the printing pressure solenoid [A]. At this time rotate the drum rotation shaft with a 10 mm spanner until the bearing [B] rides at the widest part of the printing pressure cam.
2. Confirm that the clearance [C] is between 1 and 2 mm.
3. If it is not, loosen the hexagon head screws [D] and adjust the clearance by moving the printing pressure solenoid.

7.7 MASTER PRESS SHEET SOLENOID POSITION ADJUSTMENT

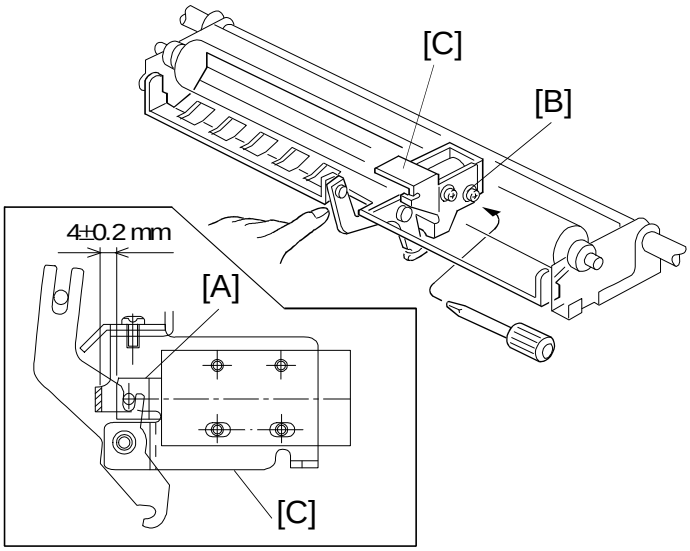

C223R565.wmf

Purpose: To ensure that the master press sheet covers the press roller when the solenoid is energized, and that the sheet does not interfere with paper feeding when the solenoid is off.

Adjustment Standard: 4 ± 0.2 mm

1. Remove the transport unit (see section 9-6, Transport Unit Removal).
2. Manually press in the plunger [A] of the master press sheet solenoid [B]. Check the gap between the tip of the solenoid plunger and the inside of the solenoid bracket [C].
3. If the gap is out of standard, loosen the two screws that hold the solenoid and adjust the solenoid position.

7.8 PRESS ROLLER REMOVAL

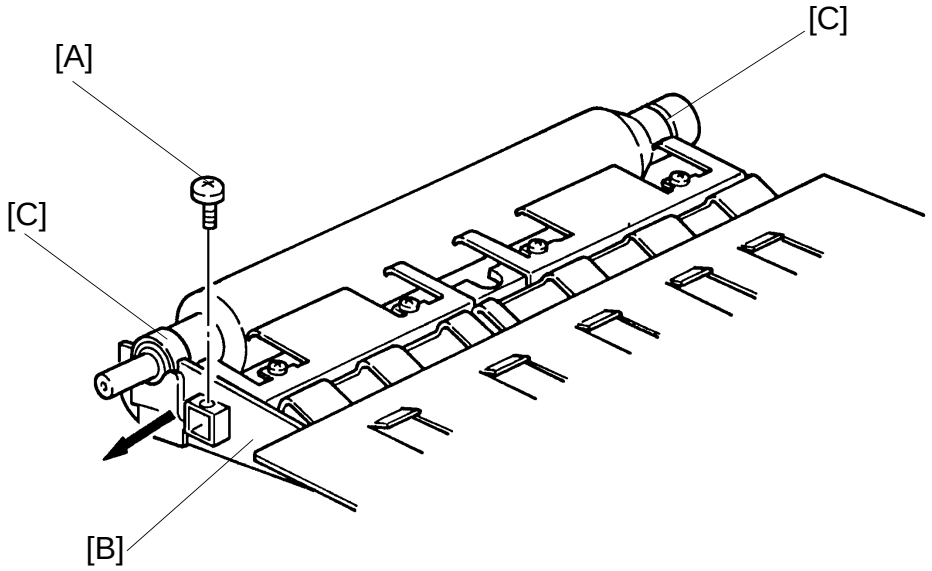

C223R567.img

1. Remove the screw [A].
2. Slide the holding plate [B] to the front side of the machine.
3. Remove the press roller.
4. Remove both right and left bearings [C] (2 E-rings).

8. DRUM

8.1 MAIN DRIVE BELT TENSION ADJUSTMENT

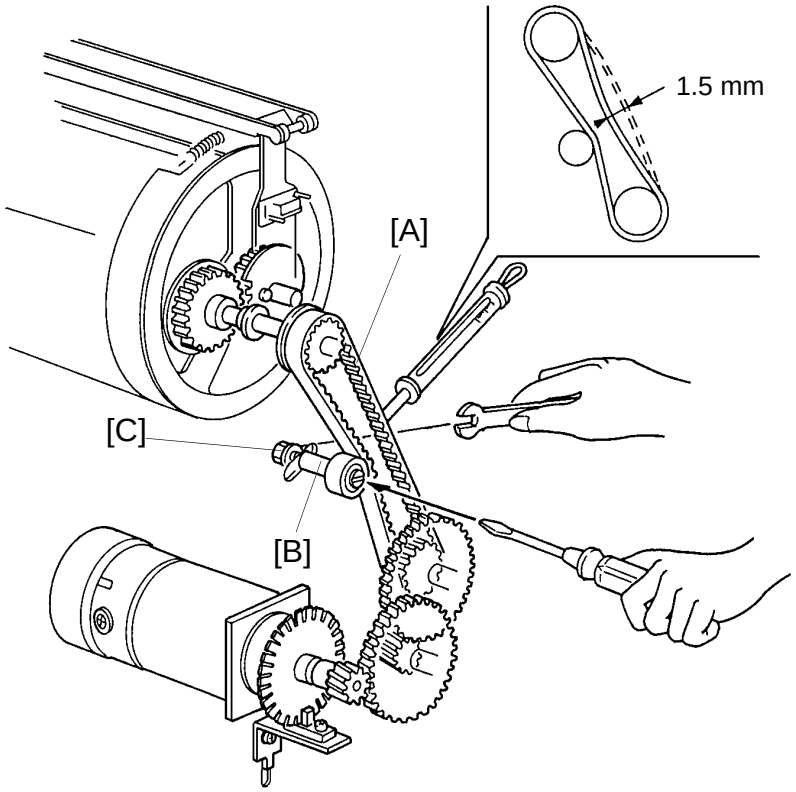

C223R568.img

Purpose: To ensure that the main motor rotation is correctly transmitted to the drum.

Adjustment Standard: 4 ± 0.2 mm

1. Remove the rear cover of the machine.
2. Apply a 1000-gram load (using a tension gauge) to the center of the main drive belt [A]. Make sure that the belt deflects 1.5 mm.
3. If it does not, remove the drum unit and adjust the belt tension by moving the tensioner shaft [B] after loosening the nut [C].
4. After adjusting, tighten the nut [C] very securely.

8.2 DRUM MASTER SENSOR

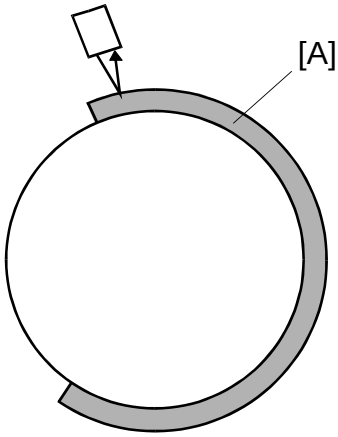

C223R569.wmf

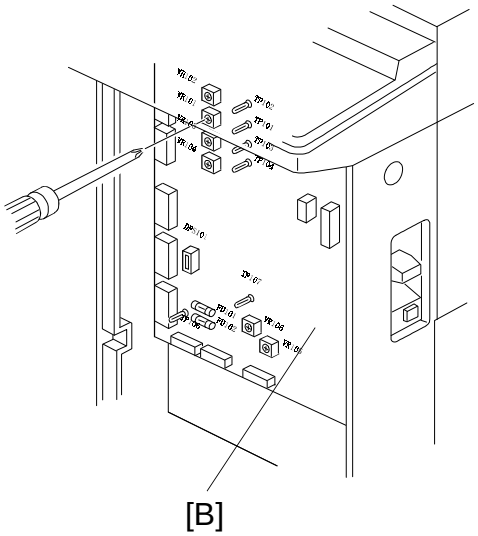

C223R601-3.wmf

Purpose: To ensure that the drum master sensor correctly detects the master on the drum.

Adjustment Standard: 0.9 to 1.0 V when the sensor is activated, and 2.0 V or higher when it is not activated.

1. Slide out the drum unit and remove the master [A] from the drum.
2. Reinstall the drum unit. Press and hold down the Drum Rotation button until the drum reaches the home position.
3. Access SP mode and select No. 138. Then press the Print Start key. The drum master sensor voltage is displayed.

   NOTE: The voltage can also be checked using TP102 (drum master sensor output) and TP107 (GND).
4. If the voltage is outside the specified range, adjust VR102 on the main PCB [B].
5. Make a master with an all-white original.

   NOTE: Make sure the master's leading edge is held by the drum clamper and that the master [A] is wrapped correctly on the drum.
6. Make sure that the drum master sensor voltage is 2.0 V or higher. At this time, LED102 will light.

8.3 PRINTING SPEED ADJUSTMENT

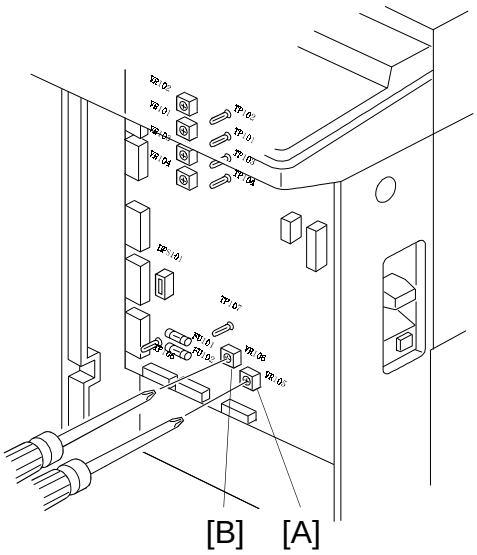

C223R608-2.wmf

Purpose: To ensure the correct main motor speed.

Adjustment Standard:

120 $^{+10}_{-0}$ rotations/minute when the fastest printing speed (speed 5) is selected. 60 $^{+0}_{-2}$ rotations/minute when the slowest speed (speed 1) is selected.

1. Press the Speed Change key to set the speed at the maximum level.
2. Make some prints. After the first print, the machine should produce 120 $^{+10}_{-0}$ prints every minute.
3. If it does not, adjust the speed of the main motor by turning VR105 [A].
4. Press the Speed Change key to select the slowest speed (speed 1).
5. Make some prints. After the first print, the machine should produce 60 $^{+0}_{-2}$ prints.
6. If it does not, adjust the speed of the main motor by turning VR106 [B].

NOTE: The fastest speed adjustment and the slowest speed adjustment do not affect each other. But both adjustments affect speeds 2, 3, and 4.

If the slowest speed (speed setting for the TS20 sorter) is faster than 60 cpm, the sorter speed cannot catch up with the machine speed and sorter jams might occur.

8.4 DRUM STOPPER ADJUSTMENT

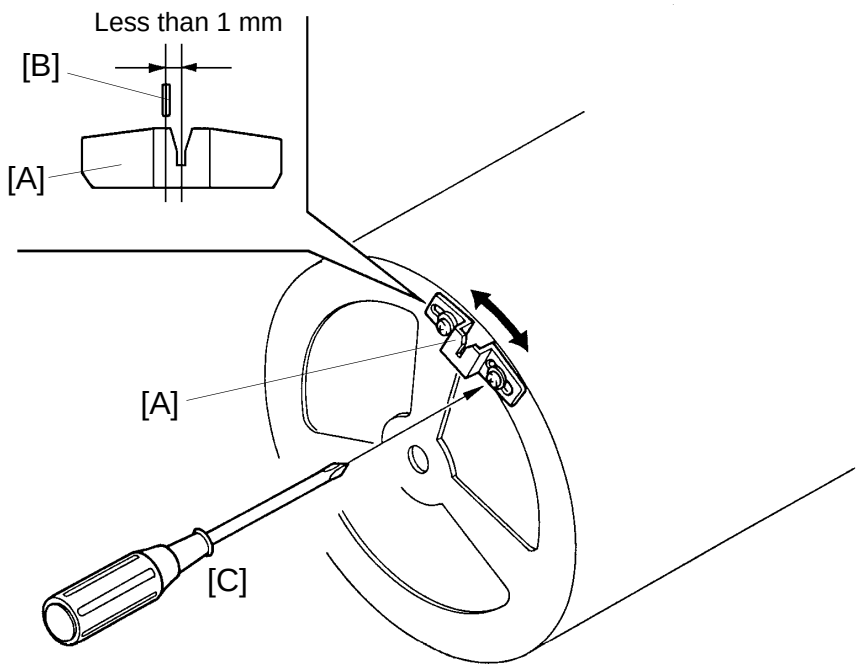

C223R571.img

Purpose: To ensure that the drum is securely locked when the drum unit is pulled out.

Adjustment Standard: Less than 1 mm

1. Remove the drum unit from the machine.
2. Make sure that the distance between the center of the drum lock [A] and the center of the drum stopper [B] is less than 1 mm.
3. If it is more than 1 mm, loosen the screws [C] and adjust the distance by moving the drum lock [A].

8.5 MASTER FEED CLAMPER CAM ADJUSTMENT

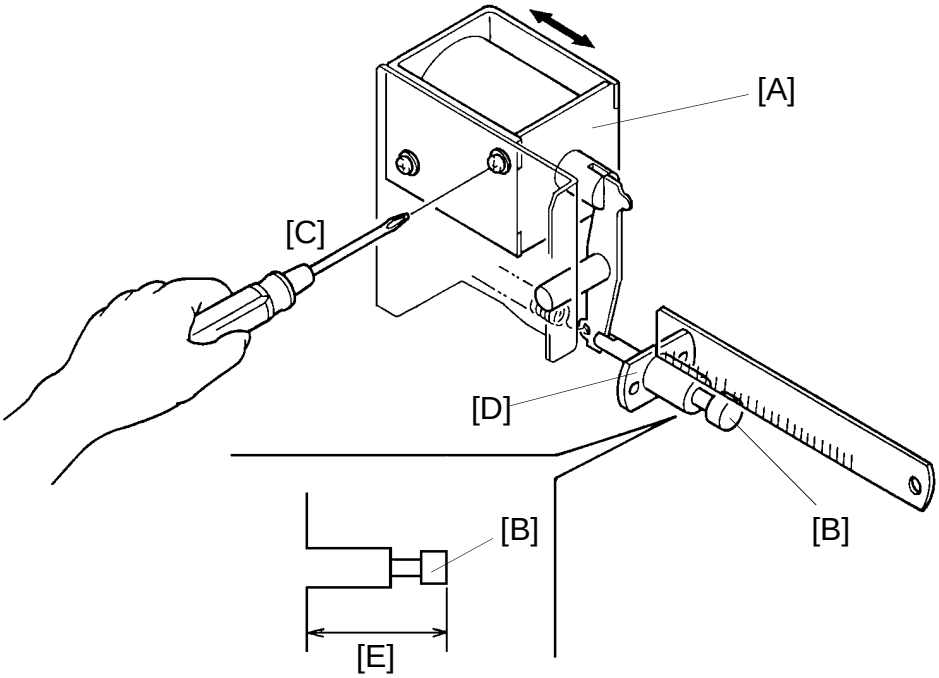

C223R572-1.img

Purpose: To ensure that the master feed clamper is open during the master feed process and is closed during other processes.

Adjustment Standard:

29 ± 0.5 mm when the solenoid is energized, and less than 25 mm when it is de-energized.

Replacement Adjustment

1. Remove the drum unit and open the master eject unit.
2. Using output check mode (SP131) No. 15, turn on the master feed clamper solenoid [A].
3. Confirm that the distance [E] between the bushing [D] and the edge of the cam [B] is 29 ± 0.5 mm when the solenoid is turned on.
4. If it is not, loosen the mounting screws [C] and adjust the solenoid position.

⚠CAUTION:
Do not leave the solenoid on longer than 10 seconds.

5. After adjusting, retighten the mounting screws [C].

8.6 MASTER EJECT CLAMPER CAM ADJUSTMENT

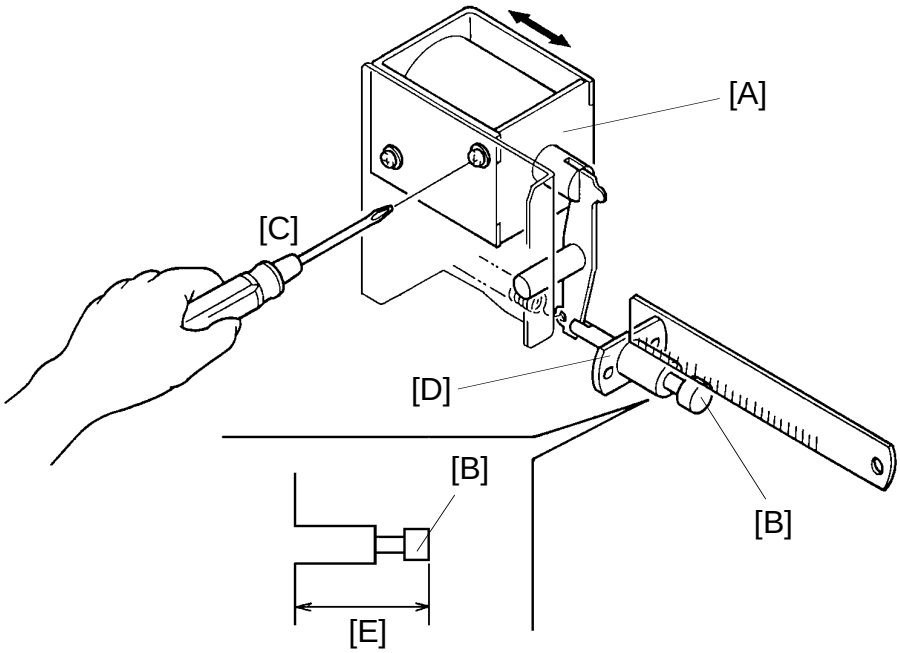

C223R572.img

Purpose: To position the master eject clamper cam [B] so that the master clamper opens correctly during the master eject process and closes correctly for all other processes.

Adjustment Standard:

29 ± 0.5 mm when the solenoid is energized, and less than 25 mm when it is de-energized.

1. Remove the drum unit and open the master eject unit.
2. Using output check mode (SP131) No. 16, turn on the master eject clamper solenoid [A].
3. Confirm that the distance [E] between the bushing [D] and the edge of the opening cam [B] is 29 ± 0.5 mm when the solenoid is turned.
4. If not, loosen the mounting screws [C] and adjust the solenoid position.

⚠CAUTION:
Do not leave the solenoid on longer than 10 seconds.

5. After adjusting, retighten the mounting screws [C].

8.7 INK DETECTION PIN ADJUSTMENT

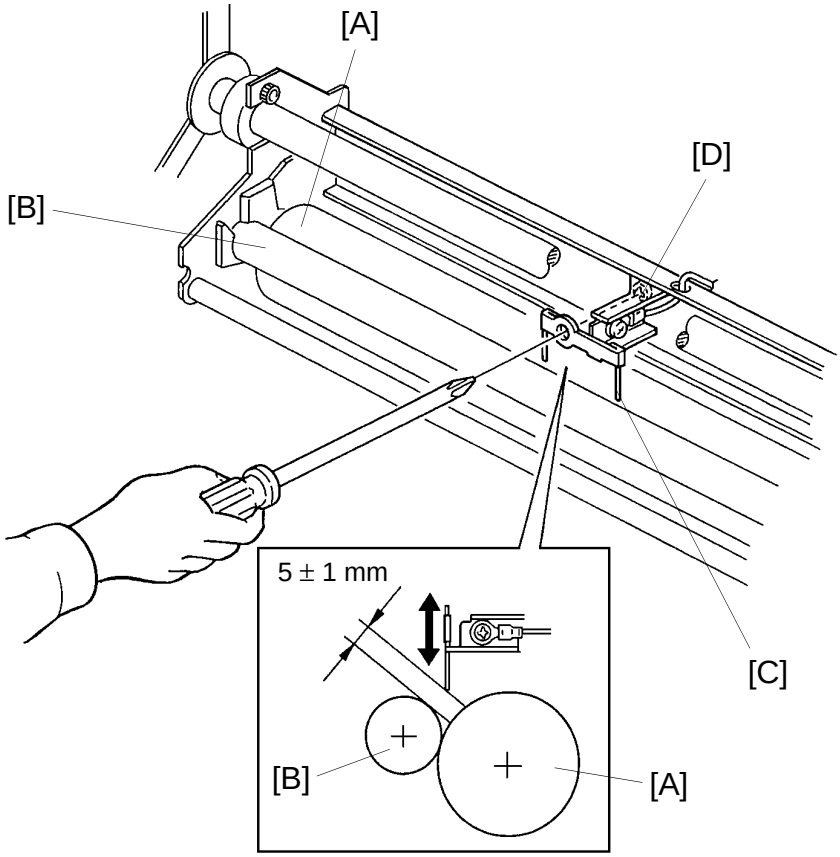

C223R574.img

Purpose: To ensure detection of ink build-up between the ink roller and the doctor roller.

Adjustment Standard: 5 ± 1 mm

1. Remove the drum unit.
2. Remove the cloth screen and the metal screen from the drum unit.
3. Remove the ink distributor (2 screws).
4. Wipe off the ink around the ink roller [A] and the doctor roller [B].
5. Make sure that the distance between the end of the ink detection pin [C] and the doctor roller [B] surface is 5 ± 1 mm.
6. If it is not, loosen the screw [D] and adjust the distance by moving the ink detection pin [C].
7. After adjusting, retighten the screw [D].

8.8 INK ROLLER GAP ADJUSTMENT

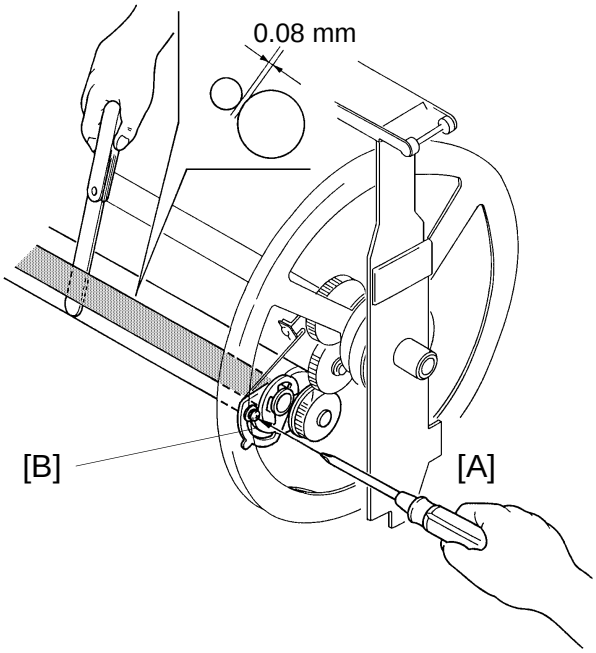

C223R575.img

Purpose: To equalize the ink thickness around the ink roller and prevent an uneven image.

Adjustment Standard: 0.08 mm

1. Remove the drum unit.
2. Remove the clamper.
3. Remove the cloth screen and the metal screen from the drum unit.
4. Remove the ink distributor (2 screws).
5. Wipe off the ink around the ink roller and the doctor roller.
6. Insert a 0.08-mm gap gauge between the doctor roller and the ink roller. Then make sure that a 0.1-mm gauge can not penetrate the gap.

   NOTE: Check the gap at the right, center, and left positions.
7. If the gap is not within specifications, loosen the screw [A] and adjust the gap by turning the eccentric bushing [B].

   NOTE: Before adjusting, remove the drive gear located on the operation side of the doctor roller because the drive gear restricts the adjustment.

8.9 INK ROLLER POSITION ADJUSTMENT

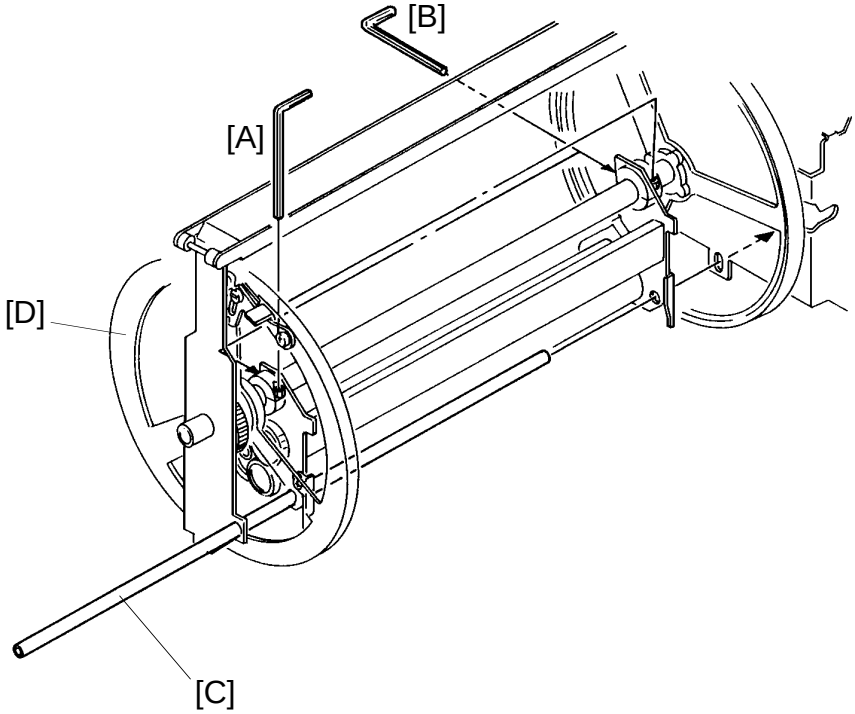

C223R576.img

Purpose: To ensure that the pressure of the press roller is applied evenly to the ink roller.

Adjustment Standard: The drum gauge must be inserted.

1. Remove the drum unit from the machine.
2. Remove the cloth screen and the metal screen from the drum unit.
3. Loosen the bolts [A] and [B] that secure the ink roller unit to the drum shaft.
4. Insert the drum gauge [C] (P/N C2009001) in the holes in both side plates of the drum unit and in both side plates of the ink roller unit.
5. With the gauge in the holes, tighten the bolts [A] and [B] so that the rotational thrust play of the flange [D] is between 0.05 and 0.2 mm.

8.10 INK SUPPLY SOLENOID ADJUSTMENT

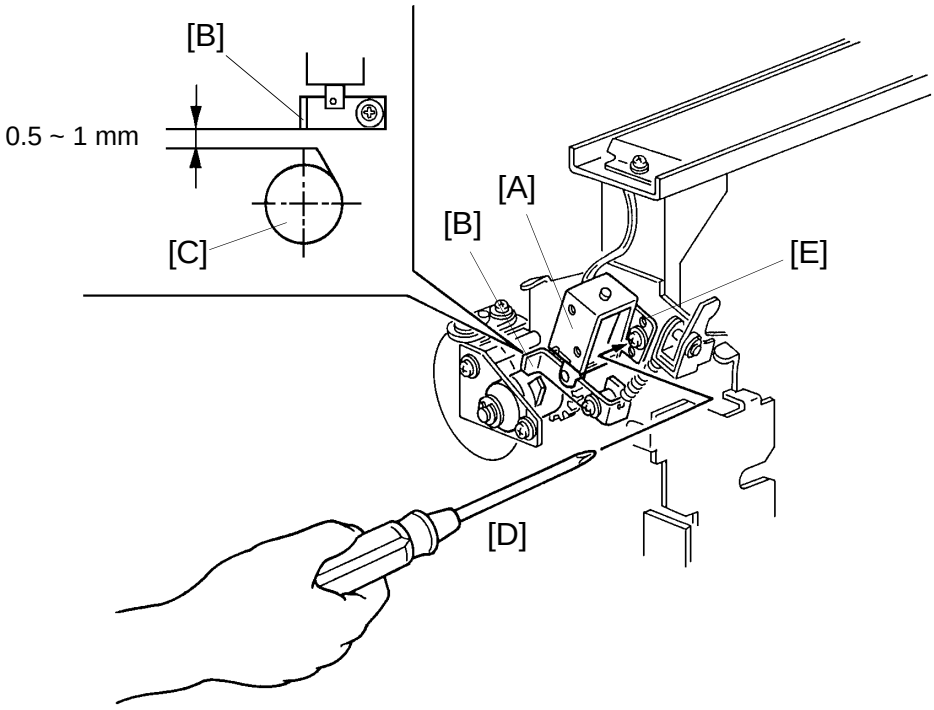

C223R577.img

Purpose: To ensure total clutch-sleeve release by the stopper when the ink supply solenoid [A] turns on and complete clutch-sleeve locking by the stopper when the ink supply solenoid turns off.

Adjustment Standard: 0.5 to 1 mm

1. Remove the drum unit from the machine.
2. Remove the upper ink supply solenoid cover and remove the front cover of the drum unit.
3. Press in the solenoid plunger by hand and make sure that the distance between the stopper [B] and the clutch sleeve [C] is between 0.5 mm and 1.0 mm as shown.
4. If it is not, loosen the screw [D] and adjust the distance by moving the solenoid bracket [E].
5. After adjusting, retighten the screw [D].

8.11 INK DETECTION ADJUSTMENT

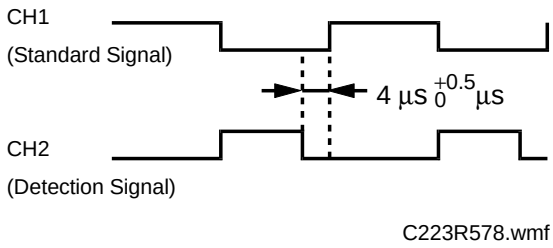

Purpose: To ensure that the ink detection PCB detects a no ink condition when the ink is running out.

Adjustment Standard: See the above illustration.

1. Remove the rear cover of the machine.
2. Connect the CH1 probe of an oscilloscope to TP1, the CH2 probe to TP2 and the GND lead to TP-12 V. Select the 5 microsecond range.
3. Turn on the main switch and install a drum with no ink. Or instead, remove the ink bottle and make prints until the Add Ink indicator lights.
4. Make sure that the waveform is as shown.

   NOTE: 1. This adjustment should be made under normal conditions (20°C/65 %RH).

   2. The period of the waveform varies inversely with temperature. (High temp. → reduced period, Low temp. → increased period)
5. If it is not, adjust the ON timing of the detection signal using VR901 on the ink detection PCB.

8.12 INK ROLLER BLADE ADJUSTMENT

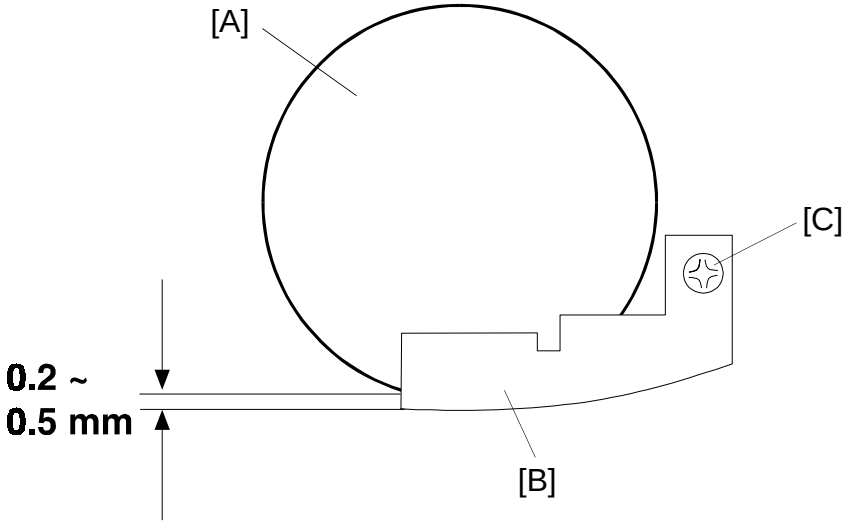

C223R617.wmf

Purpose: To prevent ink leakage from both edges of the ink roller.

Adjustment Standard: 0.2 to 0.5 mm

1. Remove the drum unit from the machine.
2. Remove the cloth screen and the metal screen.
3. Check that the distance between the edge of the ink roller [A] and the edge of the ink roller blade [B] is 0.2 to 0.5 mm.
4. If the distance is out of standard, loosen the screw [C] and adjust the ink roller blade position.
5. Retighten the screw [C].

8.13 DRUM SCREEN REMOVAL

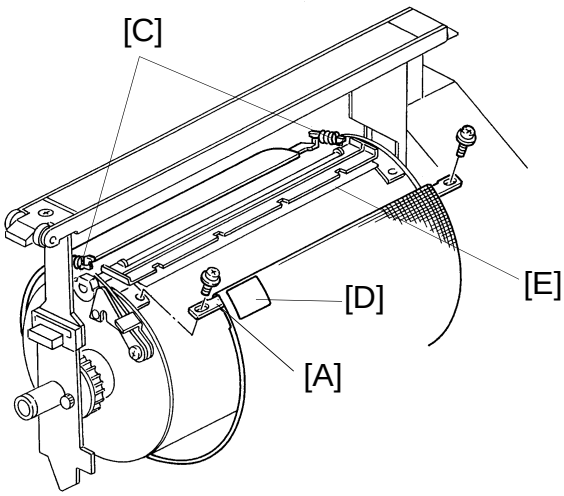

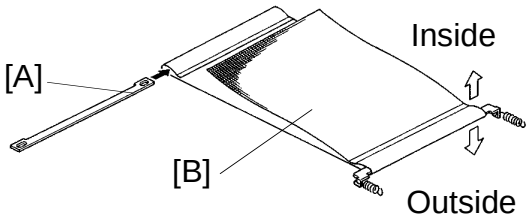

C223R579.img

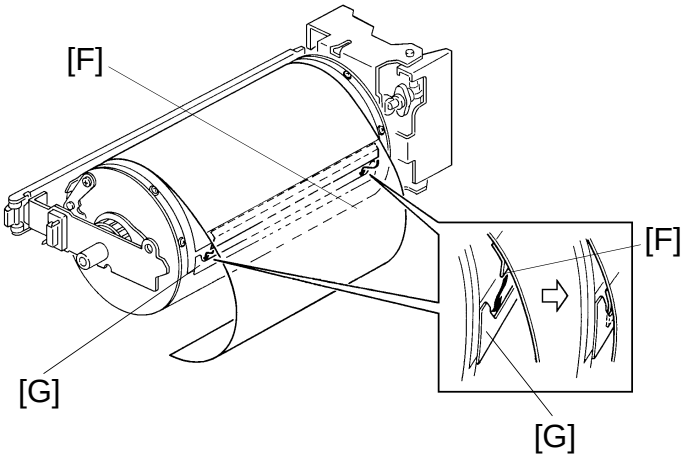

C223R580.img

C223R581.img

Replacement Adjustment

1. Remove the drum unit from the machine.
2. Remove the front stay [A] of the screen [B] (2 screws).
3. Remove the 2 springs [C].
4. Remove the screen [B].

NOTE: 1. Make sure that the black seal [D] is on the front side (outside) of the screen when reinstalling it.

2. Make sure that the front stay [A] comes under the clamper plate [E] when reinstalling it.
3. Make sure that the mylar [F] attached to the screen is correctly inserted into the pocket [G] on the drum.

8.14 DRUM DRIVE BELT REPLACEMENT

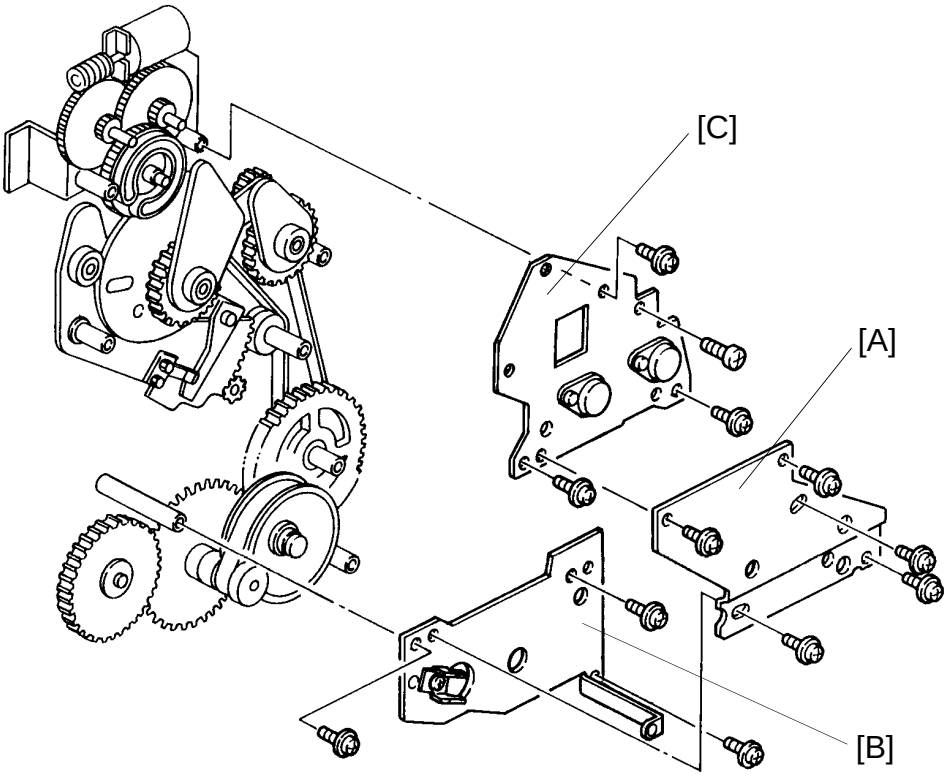

C223R582.img

Removal:

1. Set the image position to "0" by turning the main switch off and on.
2. Turn off the main switch and unplug the power supply cord.
3. Remove the drum unit.
4. Remove the rear cover.
5. Remove the center support plate [A] (5 screws).
6. Remove the lower support plate [B] (3 screws).
7. Remove the upper support plate [C] (4 screws).

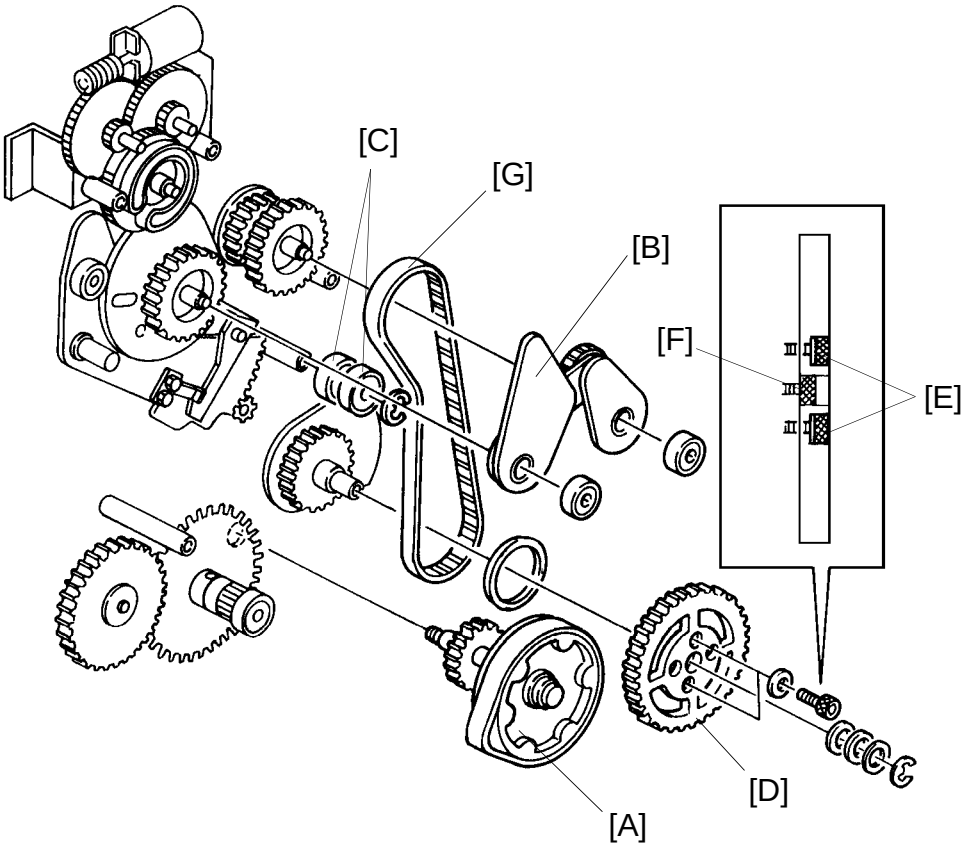

C223R583.img

8. Remove the relay gear assembly [A].
9. Remove the timing gear assembly [B].
10. Remove two belt tension bearings [C].
11. Remove the pressure cam drive gear [D] (2 hexagon bolts [E] and 1 E-ring).

    NOTE: Four hexagon bolts secure the gear [D]. Do not loosen the two deeply recessed bolts [F].
12. Remove the drum drive belt [G].

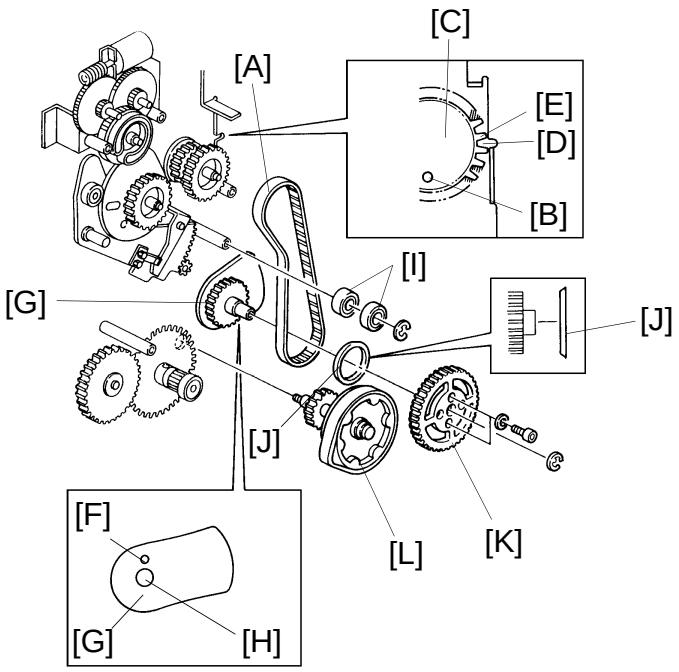

C223R584.img

Re-assembly:

1. Install a new drum drive belt [A].

2. Adjust the drum drive belt position.
   1) The alignment hole [B] in the drum drive gear [C] should be aligned with the hole in the rear side plate. At this time, the notch [D] in the plate lines up with the center of the drum drive gear cutout [E].
   2) The alignment hole [F] in the pressure cam [G] should be right over the pressure cam shaft [H].

3. Install two belt tension bearings [I] (1 E-ring).

   NOTE: Make sure that the drum drive gear and the pressure cam are in the proper position as explained above.
   If the relation between the printing pressure cam [G] position and the drum drive gear [C] position is wrong, printing pressure will be applied too late or too early. For each misaligned tooth between the cam and the gear, the print will appear 23 mm too far up or too far down.

4. Install the white spacer [J] and the pressure cam drive gear [K] (2 hexagon bolts).

   NOTE: Take care to install the white spacer [J] with the correct face towards the gear. (See the above diagram.)

5. Install the relay gear assembly [L] and the relay belt.

6. Install the lower support plate (3 screws).

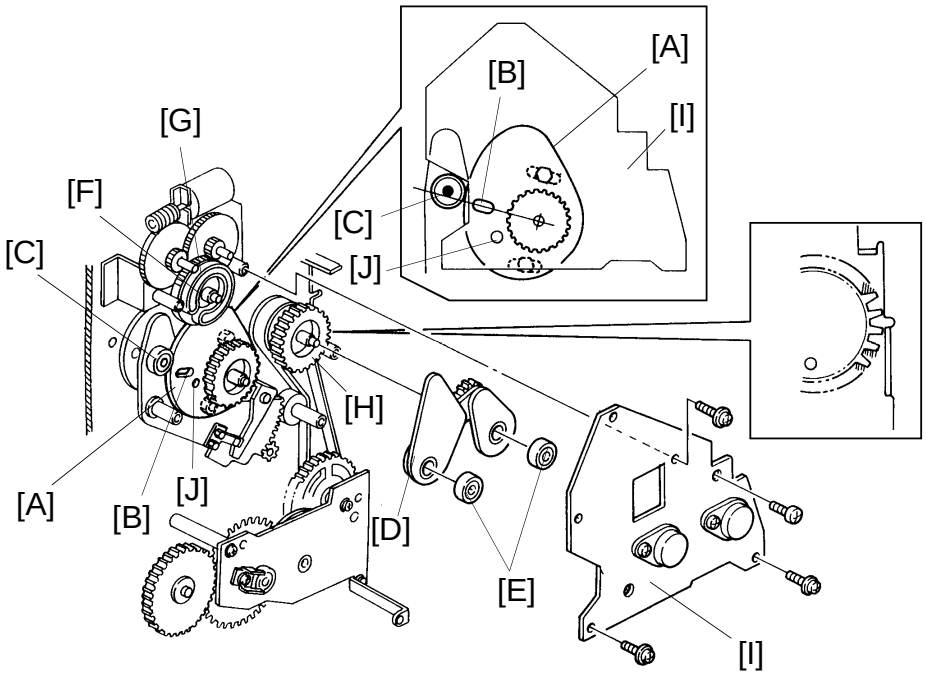

C223R585.img

7. Adjust the position of the second feed cam [A] so that the center of the slot [B] in the second feed cam is aligned with the bearing shaft [C].

8. Install the timing gear assembly [D] with the two bearings [E].

   NOTE: Make sure that the pin on the timing gear assembly is in the spiral groove [F] in the cam gear [G].
   Make sure that the drum drive gear [H] is at the home position (see step 2, sub-step 1).

9. Install the upper support plate [I] (4 screws).

10. Push down lightly on the second feed cam [A] to hold it firmly in place. While still holding it, make sure that the hole [J] in the second feed cam is aligned with the small hole in the upper support plate [I]. If it is not, repeat steps 7 to 10.

11. Make some prints to check the leading edge registration.

12. If the registration is off by more than 12 mm, repeat steps 7 to 11. If the registration is less than 12 mm, adjust the relation between the feed rollers and the gear as explained in the "Second Feed Roller Start Timing" section.

    NOTE: For each misaligned tooth of the feed cam gear, the registration is changed by approximately 12 mm.

13. Install the center support side plate (5 screws).

9. DELIVERY

9.1 FIRST PAPER EXIT SENSOR ADJUSTMENT

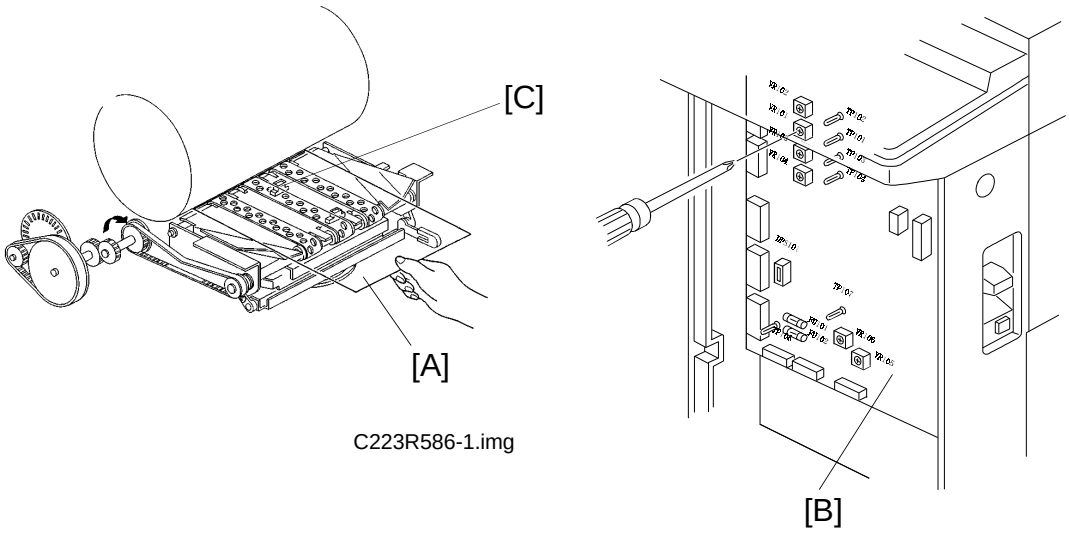

C223R586-1.img

C223R601.wmf

Purpose: To ensure that the sensor detects correct paper delivery, and to ensure that the jam indicator blinks properly after an exit misfeed or a paper wrap occurs.

Adjustment Standard: 0.8 to 0.9 V

1. Remove the right front cover of the machine.
2. Wrap a sheet of paper [A] around the drum.
3. Access SP mode and select No. 135. Then press the Print Start key. The 1st exit sensor voltage is displayed. It should be between 0.8 and 0.9 volts.

   NOTE: The 1st exit sensor voltage can also be checked using TP101 (1st exit sensor output) and TP107 (GND).
4. If it is not, adjust the sensor sensitivity by turning VR101 on the main PCB [B].
5. To confirm that LED 101 turns ON and OFF, activate the first paper exit sensor [C]. Use a sheet of paper to activate the sensor.

9.2 SECOND PAPER EXIT SENSOR ADJUSTMENT

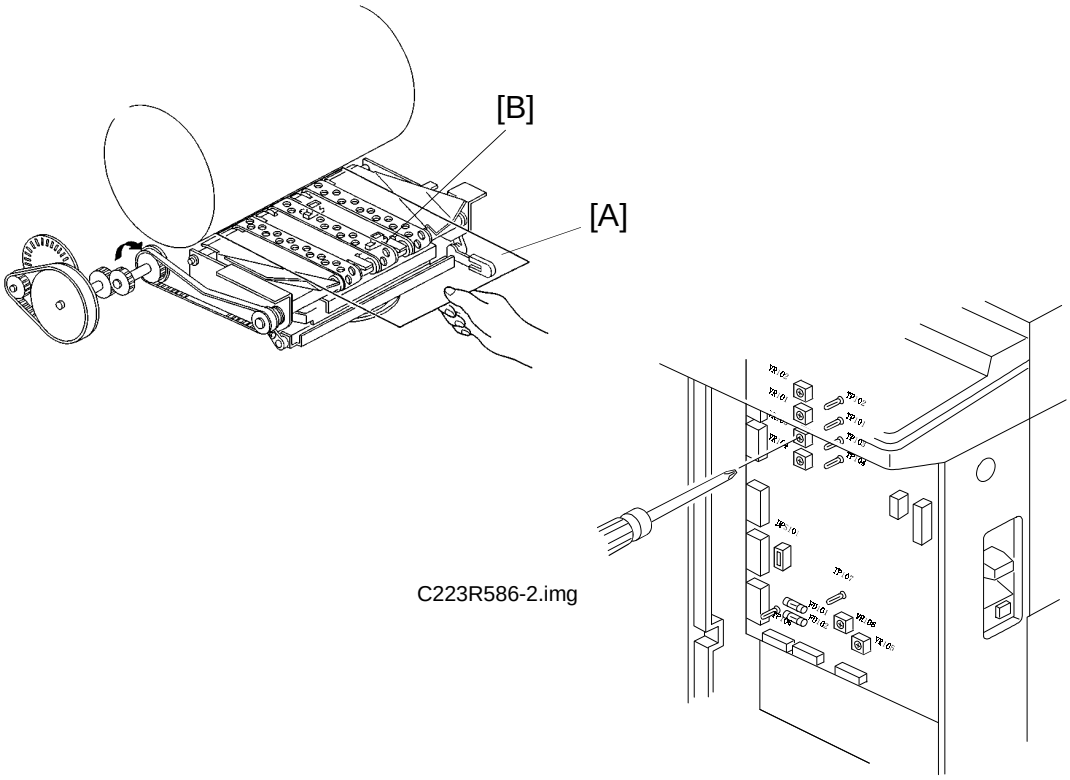

C223R619.wmf

Purpose: To ensure the sensor detects printing paper correctly, and to ensure that the jam indicator blinks and the machine stops when a paper wrap or an exit misfeed occurs.

Adjustment Standard: VR103 is set at the on/off threshold of LED103 [D].

1. Remove the right front cover of the machine.
2. Place a sheet of paper [A] 15 mm away from the second paper exit sensor [B]. Make sure that VR103 is set at the on/off threshold of LED103.
3. If it is not, adjust the sensor sensitivity by turning VR103 on the main PCB.

9.3 EXIT PAWL CLEARANCE ADJUSTMENT

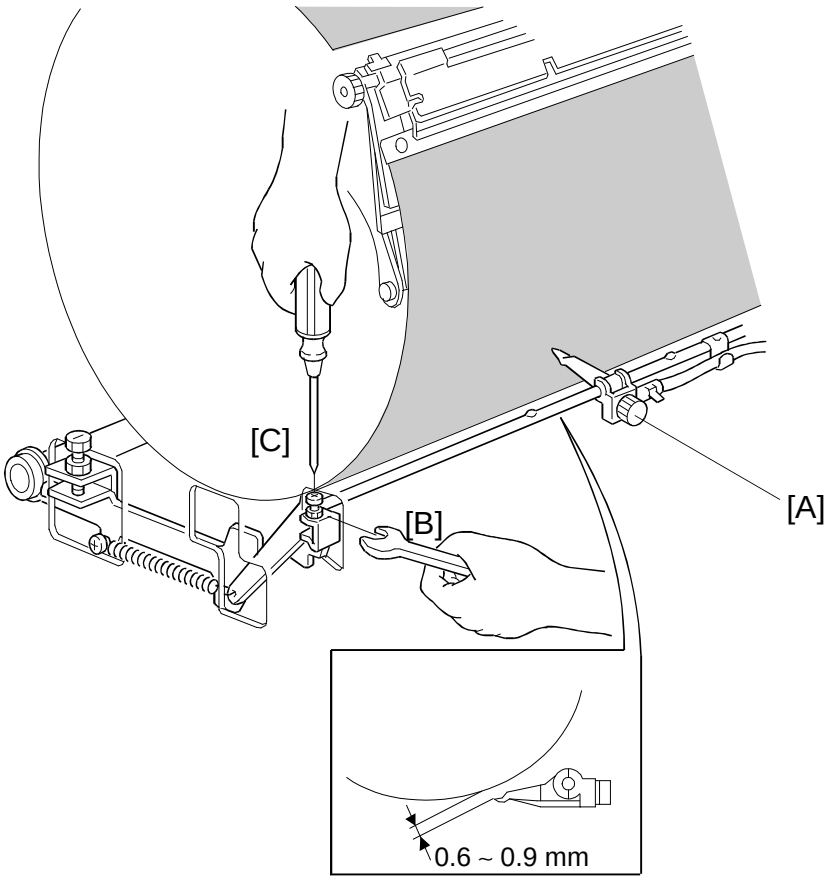

C223R588.img

Purpose: To ensure that the printing paper is delivered without a paper wrap problem or damage to the screen.

Adjustment Standard: 0.6 to 0.9 mm

1. Remove the rear cover of the machine and open the master eject unit.
2. Put a few sheets of paper on the paper table. Then, set up the paper table in the paper feed position. (Use output check mode No. 19.)
3. To feed a sheet of paper, turn on the paper feed solenoid by hand, and using a 10 mm spanner, gradually rotate the drum rotation shaft and at the same time manually turn on the printing pressure solenoid to move the exit pawl [A] to the drum.
4. Make sure that the clearance between the drum and the exit pawl is between 0.6 and 0.9 mm when the exit pawl is closest to the drum.
5. If it is not, loosen the hexagon nut [B] of the exit pawl drive arm. Then adjust the clearance by turning the screw [C].
6. Check the adjustment by repeating steps 3 and 4.

9.4 EXIT PAWL TIMING ADJUSTMENT

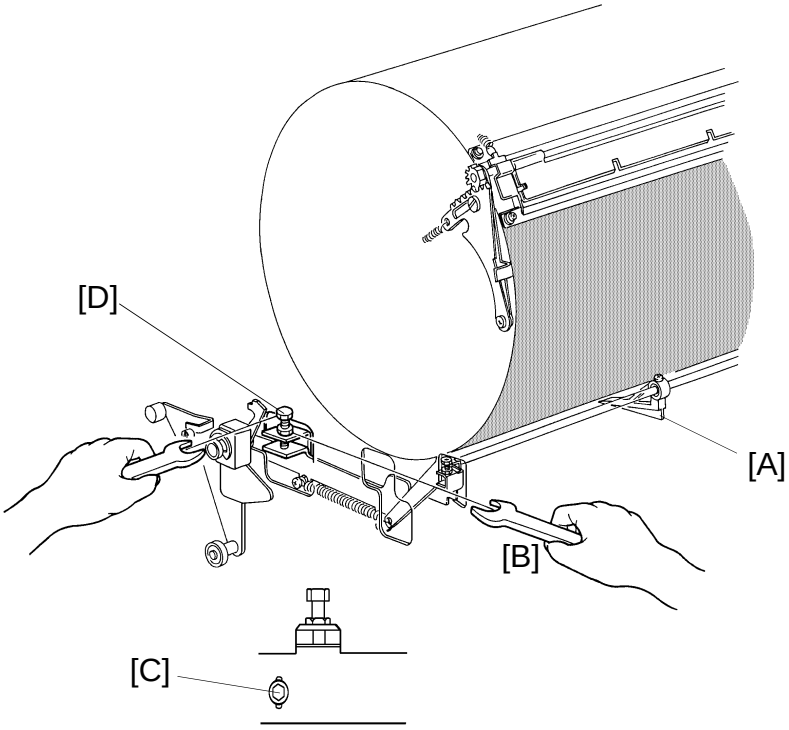

C223R589.img

Purpose: To ensure that the exit pawl does not touch the master clamper.

Adjustment Standard: 230 ± 2°

1. Remove the rear cover of the machine.
2. Press and hold down the Drum Rotation button until the drum reaches the home position.
3. Position a protractor on the end of the image shift shaft. Position the origin of the protractor at the bracket of the master feed clamper solenoid.
4. Manually press in the plunger of the printing pressure solenoid. Release the paper detection arm manually by rotating the drum rotation shaft with a spanner (10 mm).
5. Measure the degrees turned when the exit pawl [A] comes closest to the drum. This must be 230 ± 2°.
6. If it is not, loosen the hexagon nut [B] and screw [C] , then adjust the exit pawl position by turning the hexagon bolt [D].
7. Check the adjustment by repeating steps 4 to 6.

9.5 PAPER EXIT PAWL AIR PUMP ADJUSTMENT

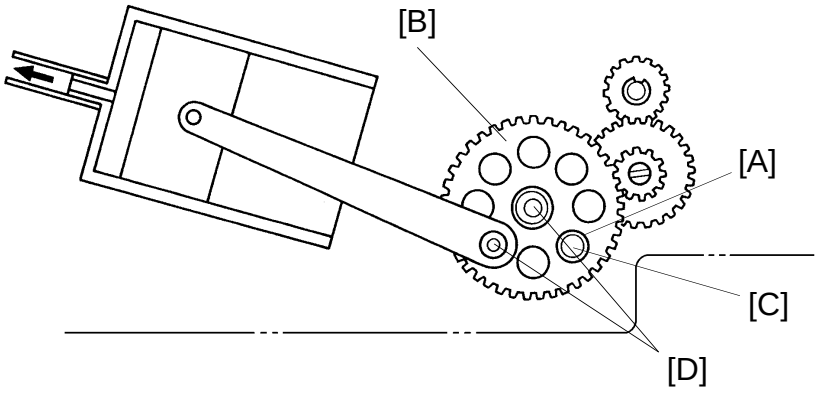

C223R590.img

Purpose: To ensure that the paper exit pawl air pump produces a jet of air when the paper exit pawl is in the upper position (near the drum surface).

Adjustment Standard:

When the drum has rotated 341 degrees, the pump piston position is at the upper dead point.

1. Open the front door and remove the inner cover.
2. Press and hold down the Drum Rotate button until the drum reaches the home position.
3. Confirm that the 13 mm diameter hole [A] in the gear [B] and the 8 mm diameter hole [C] in the side plate are lined up.
4. If the holes are not lined up, remove the E-rings [D] and reposition the gear.
5. Rotate the drum to the home position and do step 3 again.

9.6 TRANSPORT UNIT REMOVAL

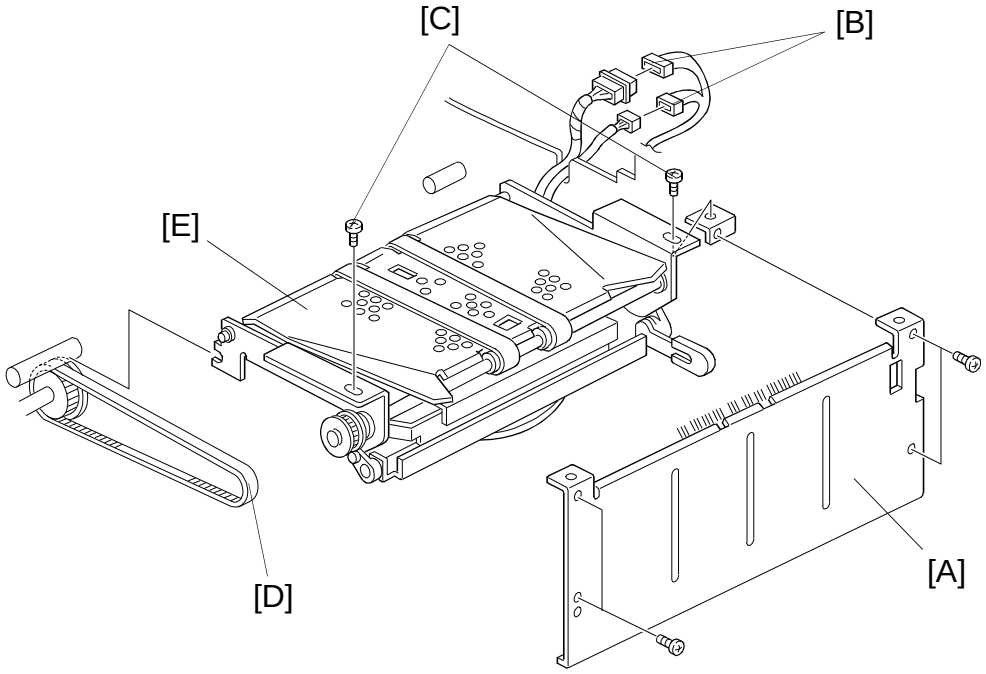

C223R591.img

1. Remove the right front cover and remove the inner cover.
2. Remove the exit side plate [A] (4 screws).
3. Remove the harness clamp and disconnect the two connectors [B].
4. Remove the two screws [C].
5. Take off the belt [D] from the pulley and remove the transport unit [E].

10. IMAGE POSIITONING

10.1 IMAGE POSITION ADJUSTMENT

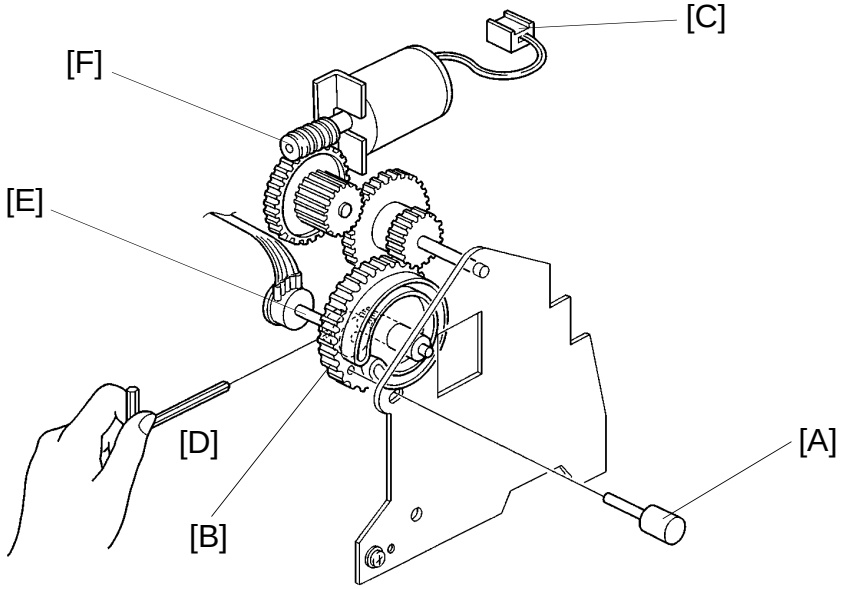

C223R592.img

Purpose: To ensure that the image is well centered when the Image Position key is set to "0".

Adjustment Standard: The gauge [A] must be inserted.

1. Remove the rear cover.
2. Turn on the main switch. This way, the image position is returned exactly its initial position. (The image position indicator shows "0".)
3. Make sure that it is possible to insert the gauge [A] (P/N C2009002).
4. If the gauge [A] cannot be inserted into the hole in the gear [B], move the gear [B] to enable the gauge to be inserted into the hole as follows:
   a) Disconnect the image positioning motor connector [C].
   b) Loosen the Allen screw [D] so that the gear at the end of the image position sensor shaft [E] rotates freely.
   c) Turn the gear [B]. To do this, turn the worm gear [F] manually until the gauge [A] can be inserted into the hole in gear [B].

NOTE: Do not turn the image position sensor shaft [E]. If the shaft is turned, the image position indicator will be affected. If the indicator is affected, turn off the main switch, then turn it on again. This returns the indicator to "0".

5. Make some prints to check the image position.

⚠CAUTION:
Do not keep on pressing the Image Position key if the image position sensor is broken or removed. The plastic gears between the worm gear [F] and gear [B] may break if the pin which moves along the spiral track of the gear [B] hits the end of the track.

SECTION 6

TROUBLESHOOTING

1. ELECTRICAL COMPONENT PROBLEMS

Component	Condition	Symptom
FU1 (Power Supply Unit)	Open	The machine does not work. (No indicators on the operation panel turn on.)
FU2 (Power Supply Unit)	Open	When the main switch is turned on, "E-11" is displayed.
FU3 (Power Supply Unit)	Open	When the main switch is turned on, "E-13" is displayed.
FU4 (Power Supply Unit)	Open	The door open condition cannot be released.
FU101 (Main PCB)	Open	When the Print Start key is pressed, paper is not fed and jam indicators "B" and blink. When the Master Making key is pressed, the master is not ejected and jam indicators "F" and blink.
FU102 (Main PCB)	Open	If the master is wrapped around the drum, when the Master Making key is pressed, the master is not ejected and jam indicators "F" and blink. If the master is not wrapped around the drum, when the Master Making key is pressed, the master is not wrapped around the drum and jam indicators "C" and blink.
FU301 (AC drive board)	Open	The door open condition cannot be released.
Master Eject Sensor	ON condition (Activated)	When the main switch is turned on, jam indicators "F" and blink.
	OFF condition (Not activated)	When the master is being ejected, the jam indicators "F" and blink.
Full Master Box Sensor	ON condition (Not interrupted)	When the master eject box is full, the indicator does not blink.
	OFF condition (Interrupted)	After master ejecting is finished, the indicator blinks.
Paper Table Lower Limit Sensor	ON condition (Interrupted)	The paper table does not go down.
	OFF condition (Not interrupted)	When the paper feed table goes down and stops, the cover open indicator blinks.
Paper Table Safety Switch	ON condition (Feeler is actuated)	When the main switch is turned on, the cover open indicator blinks.
	OFF condition (Feeler is not actuated)	The paper feed safety bar does not work. If the paper table lower limit sensor is faulty, the paper table moves all the way down and locks.

Trouble-shooting

Component	Condition	Symptom
Paper Table Height Sensor	ON condition (Interrupted)	When the paper feed table goes up, it does not stop at the proper position and E-02 lights.
	OFF condition (Not interrupted)	The paper feed table does not go up. Jam indicators "B" and blink when the Print key is pressed.
Paper End Sensor	ON condition (Activated)	When there is no paper on the paper feed table, the Print Start key can be used, but jam indicators "B" and blink.
	OFF condition (Not activated)	Though there is paper on the paper table, the paper end indicator blinks.
Printing Pressure Sensor	ON condition (Interrupted)	Jam indicators "B" and blink after a trial print and the paper stops on the transport unit.
	OFF condition (Not interrupted)	Jam indicators "E" and blink when the main switch is turned on. Drum rotation does not stop after the Reset key is pressed.
First Paper Exit Sensor	ON condition (Activated)	When the main switch is turned on, jam indicators "G" and blink.
	OFF condition (Not activated)	Jam indicators "B", "E", and blink after one sheet of paper has been fed out.
Second Paper Exit Sensor	ON condition (Activated)	When the main switch is turned on, jam indicators "G" and blink.
	OFF condition (Not activated)	Jam indicators "E" and blink after one sheet of paper has been fed out.
Drum Rotation Sensor	ON condition (Interrupted)	When the Print Start key or the Master Making key is pressed, E-06 is indicated.
	OFF condition (Not interrupted)	Same as the above symptom.
Master End Sensor	ON condition (Activated)	Normal operation when master paper is present. Master end is not detected: Master End indicators "C" and do not blink and jam indicators "C" and blink.
	OFF condition (Not activated)	Even if master paper is present, the Master End indicators "C" and blink.
Right Cutter Switch (Rear)	ON condition (Feeler is actuated)	The master is not cut. (The cutter unit does not move at all.)
	OFF condition (Feeler is not actuated)	When the master is cut, E-01 is indicated. At that time, the cutter does not return to the front.

Component	Condition	Symptom
Left Cutter Switch (Front)	ON condition (Feeler is actuated)	The master is not cut. (The cutter unit does not return from the rear.)
	OFF condition (Feeler is not actuated)	When the main switch is turned on, E-01 is indicated.
First Drum Position Sensor	OFF condition (Not interrupted)	When the main switch is turned on, the drum starts rotating and it does not stop.
	ON condition (Interrupted)	1) Jam indicators "B" and blink when the Print key is pressed. The drum cannot be removed. 2) Jam indicator C + blink after the Master Making key is pressed. The drum cannot be removed.
Second Drum Position Sensor	OFF condition (Not interrupted)	1) When the Print key is pressed, paper is not fed but the drum rotates and never stops. 2) Master Eject jam is detected after the Master Making key is pressed.
	ON condition (Interrupted)	1) When the Print key is pressed, paper is not fed but the drum rotates and never stops. 2) Master Eject jam is detected after the Master Making key is pressed.
Master Buckle Sensor	ON condition (Activated)	When the main switch is turned on, jam indicators "C" and blink and cannot be reset.
	OFF condition (Not activated)	When the Master Making key is pressed, the original stops halfway, and jam indicators "A", "C", and blink.
Upper Pressure Plate Sensor	ON condition (Not interrupted)	When the main switch is turned on, the pressure plate keeps moving up and down. Then "E-12" is displayed.
	OFF condition (Interrupted)	After master making is finished and one sheet of paper has been delivered, lights. The pressure plate stops at the lower position.
Lower Pressure Plate Sensor	ON condition (Interrupted)	After master making is finished and one sheet of paper has been delivered, lights.
	OFF condition (Not interrupted)	During the master eject process, the machine stops and E-12 is displayed.
Paper Width Sensor 0	ON (Activated)	The machine cannot detect the correct paper size.
	OFF (Not activated)	
Paper Width Sensor 1	ON (Activated)	The machine cannot detect the correct paper size.
	OFF (Not activated)	

Trouble-shooting

Component	Condition	Symptom
Paper Width Sensor 2	ON (Activated)	The machine cannot detect the correct paper size.
	OFF (Not activated)	
Paper Width Sensor 3	ON (Activated)	The machine cannot detect the correct paper size.
	OFF (Not activated)	
Paper Length Sensor [G]	ON (Activated)	A3 paper is detected even though A4 sideways paper is on the paper table.
	OFF (Not activated)	A4 sideways paper is detected even though A3 paper is on the paper table.
Drum Master Sensor	Always ON (Sensor always detects white)	**If a master is on the drum:** The machine works correctly. **If no master is on the drum:** Indicators "F" and blink during the master eject process. Printing starts when the Print Start key is pressed, but indicators "E", "B", and soon turn on and the machine stops.
	OFF (Sensor always detects black)	**If a master is on the drum:** Two masters are wrapped on the drum. **If no master is on the drum:** The master is wrapped correctly on the drum, but the "M" indicator blinks when the Print Start key is pressed.
Platen Cover Position Sensor	ON condition (Interrupted)	The shadow erase function does not work even if the platen cover is opened more than 25 degrees.
	OFF condition (Not interrupted)	The shadow erase function works regardless of whether the platen cover is opened or not.
Scanner Home Position Sensor	ON condition (Not interrupted)	"E-13" is displayed when the main switch is turned on.
	OFF condition (Interrupted)	"E-13" is displayed when the main switch is turned on.
Original Sensor	On condition (Activated)	The Master Making key is accepted even if an original has not been placed on the exposure glass.
	ON condition (Not activated)	"SET THE ORIGINALS" is displayed when the Master Making key is pressed even if an original has been placed on the exposure glass.

2. IMAGE AND PAPER FEED PROBLEMS

2.1 IMAGE QUALITY PROBLEMS

1. No image, white lines, uneven image on copies

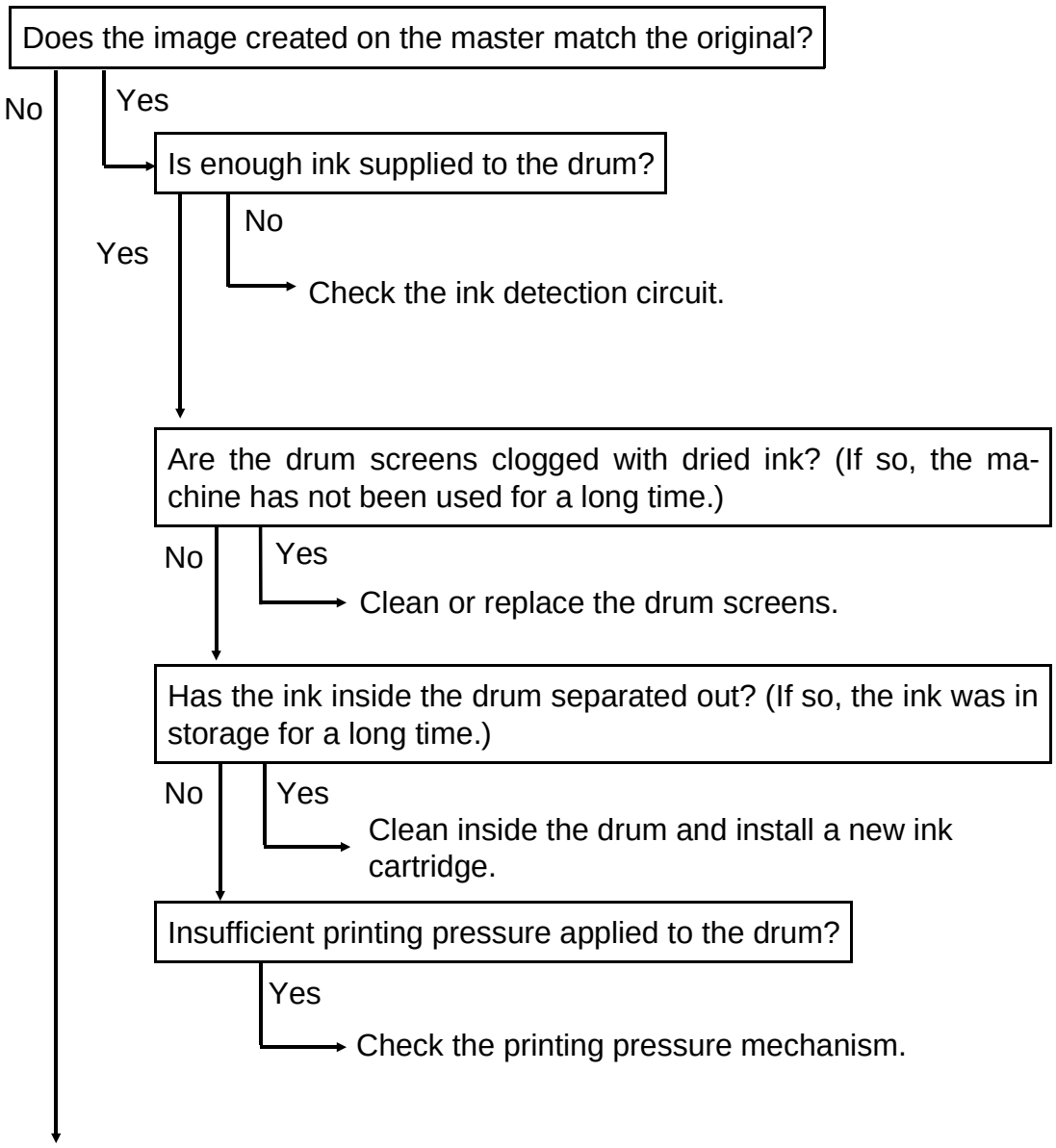

Trouble-shooting

Has the platen roller been mounted correctly on the thermal head?

Yes

No → Mount the platen roller correctly.

Make prints using the Thermal Head Pattern Test, and check the printout (see Service Tables; Thermal Head Test)

Does the same problem still occur with the test pattern?

Yes

No → The A/D conversion PCB, CCD PCB, or image processing PCB.

→ The thermal head, thermal head drive PCB, or image processing PCB is defective.

2. The printed image is enlarged or reduced in the paper feed direction

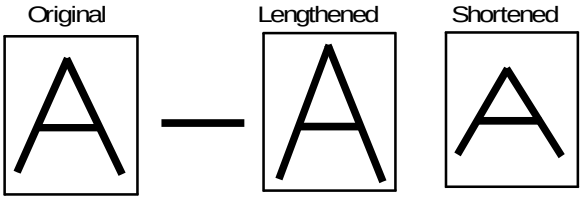

- Is the printed image larger than the original in the paper feed direction?
  - No → Is the printed image smaller than the original in the paper feed direction?
  - Yes → Is the scanner motor functioning normally?
    - Yes → Are the drive belts in the original feed section adjusted to the correct tension?
      - Yes → Are any of the pulleys and/or gears in the original feed section loose?
        - No → Tighten the screws securing the pulleys and/or gears.
      - No → Adjust the belt tension by loosening and tightening the belt tension bracket screws (see Replacement & Adjustment; Scanner Timing Belts).
    - No → Check the scanner motor.
- Is the printed image smaller than the original in the paper feed direction?
  - Yes → Is the master feed motor functioning normally?
    - Yes → Are the drive belts in the master feed section adjusted to the correct tension?
      - Yes →
      - No → Adjust the belt tension (see Replacement & Adjustment; Master Feed).
    - No → Check the master feed motor.

Trouble-shooting

Are any of the pulleys and/or gears in the master feed section loose?

Yes

→ Tighten the screws securing the pulleys and/or the gears.

2.2 PAPER FEED PROBLEMS

1. No paper is fed from the paper table

- Are the paper feed rollers turning normally?
  - No → Has the timing belt slipped off the paper feed roller pulley?
  - Yes → Does the paper feed table rise when the Print Start key is pressed?
    - No → Check the paper table height sensor.
    - Yes → Has the surface of the paper feed roller been damaged?
      - Yes → Replace the roller.
      - No → Has the timing belt slipped off the paper feed roller pulley?
- Has the timing belt slipped off the paper feed roller pulley?
  - Yes → Put the belt back on.
  - No → Has the plunger of the paper feed solenoid been pulled out?
- Has the plunger of the paper feed solenoid been pulled out?
  - Yes → Is the paper feed sector gear turning normally?
  - No → Is there enough clearance between the paper feed sector gear stopper and the stopper pin?
    - No → Adjust the clearance (see Replacement & Adjustment; Paper Feed).
    - Yes → Does the paper feed solenoid energize?
      - No → Check the paper feed solenoid and the main PCB.
      - Yes → Is the paper feed sector gear turning normally?
- Is the paper feed sector gear turning normally?
  - Yes → Check the paper feed roller.
  - No → Check the sector gear mechanism.

Trouble-shooting

Is the one-way clutch on the paper feed roller shaft slipping? (Paper is often not fed forward at high printing speeds.)

Yes

→ Lightly sand the roller shaft surface with fine sandpaper (this increases the coefficient of friction) or replace the clutch.

2. The paper's leading edge jams under the second feed roller

Does the upper second feed roller contact the lower second feed roller and are both rollers turning normally?

- Yes → Is any paper stuck between the guide plates?
- No → Is the second feed sector gear turning normally?
  - No → Check the clearance between the second feed sector gear stopper and the stopper pin.
  - Yes → Is the one-way clutch on the lower second feed roller shaft slipping? (Paper jams frequently occur at high printing speeds.)
    - Yes → Lightly sand the roller shaft surface with fine sandpaper (this increases the coefficient of friction) or replace the clutch.

Is the paper detection pin moving normally?

- Yes → Is any paper stuck between the guide plates?
- No → Check the paper detection arm mechanism.

Is any paper stuck between the guide plates?

- No → Are the guide plates at the correct height?
- Yes → Remove the paper.

Are the guide plates at the correct height?

- No → Adjust the height of the plates (see Replacement & Adjustment; Lower Guide Plate Adjustment).

Trouble-shooting

3. The paper's leading edge jams under the drum

- Is printing pressure correctly applied to the drum?
  - Yes → Is the printing pressure timing correct?
  - No → Does the printing pressure solenoid turn on?
    - No → Check the solenoid in I/O check mode.
    - Yes → Is the clearance between the printing pressure stopper and the printing pressure arm correct?
      - No → Adjust the clearance (see Replacement & Adjustment; Printing Pressure Solenoid Clearance Adjustment).
      - Yes → Is the printing pressure timing correct?
- Is the printing pressure timing correct?
  - No → Adjust the timing (see Replacement & Adjustment; Pressure Timing Adjustment).
  - Yes → Is the paper detection pin moving smoothly?
- Is the paper detection pin moving smoothly?
  - No → Check the paper detection arm mechanism.
  - Yes → Is the upper second feed roller moving normally? (The upper second feed roller should move up when the pressure roller contacts the drum.)
- Is the upper second feed roller moving normally? (The upper second feed roller should move up when the pressure roller contacts the drum.)
  - No → Adjust the roller up/down timing (see Replacement & Adjustment; Adjusting the Feed Length of the Second Feed Roller).

4. Paper frequently jams or is not fed during high speed printing (but not at low printing speeds)

Is the surface of the paper feed roller damaged or defective?

- Yes → Replace the roller.
- No ↓

Is the timing belt of the paper feed roller slipping?

- Yes → Adjust the belt tension.
- No ↓

Is the one-way clutch on the paper feed roller shaft slipping?

- Yes → Lightly sand the paper feed roller shaft with fine sandpaper or replace the one-way clutch.
- No ↓

Is there enough clearance between the paper detection arm and the pressure release arm?

- No → Adjust the clearance (see Replacement & Adjustment; Paper Detection Arm Clearance Adjustment).
- Yes ↓

Is the printing pressure cam timing correct? (If not, the maximum printing area cannot be created.)

- No → Adjust the cam timing (see Replacement & Adjustment; Pressure Timing Adjustment).

5. Paper frequently jams at the sorter

Is the paper table shifted more than 3 mm?

No

Yes → Install the paper table movement eliminators, or change the positions of the paper table movement limit switch brackets. (Refer to the sorter and LCT installation procedures.)

Is the print speed higher than 60 rpm?

No

Yes → Reduce the print speed using VR 106 on the main PCB. (If the print speed is higher than 60 rpm, the bin movement cannot keep up with the printing speed.)

Is paper properly held on the transport belt?

No

Yes → Check the transport vacuum fan motor.

Is the paper trailing edge caught by the bin entrance?

Yes → Increase the transport belt speed using SP mode No. 20. (If the belt speed is too fast, the paper will be arranged in the bins poorly.)